EN

DETAILED INSTRUCTIONS
FOR USE OF WASHING MACHINE

gorenje

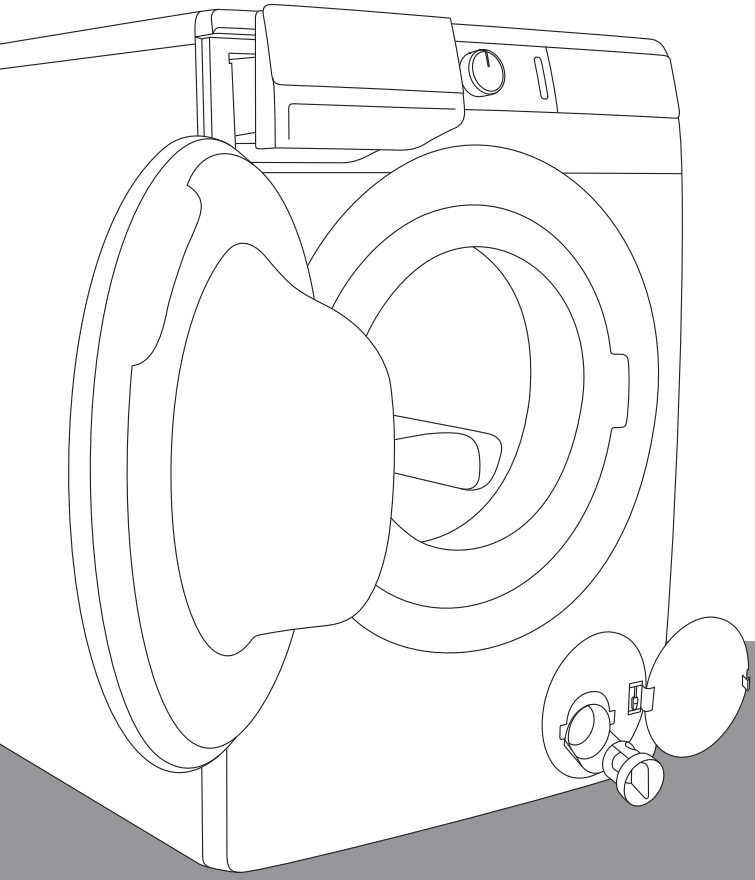

www.gorenje.com

Life is complicated today. Let's make laundry care simple! Your new washing machine uses innovative technology and latest achievements in laundry care to help you simplify your daily household chores. The latest technology used in our washing machine ensures the gentlest care for each garment with minimum creasing. At the same time, your washing machine will be easy on the environment, owing to its highly efficient use of power, water and detergent.

This washing machine is intended solely for household use. Please do not use it for any laundry labelled as not suitable for machine washing.

The following symbols are used throughout the manual and they have the following meanings:

Information, advice, tip, or recommendation

Warning – general danger

Warning – danger of electric shock

Warning – danger of hot surface

Warning – danger of fire

It is important that you carefully read the instructions.

CONTENTS

4 SAFETY PRECAUTIONS

INTRODUCTION

8 WASHING MACHINE DESCRIPTION
9 Technical specifications
10 Control unit

12 INSTALLATION AND CONNECTION
12 Removing the blocking rods
13 Moving and transport after installation
13 Selecting the room
13 Adjusting the washing machine feet
14 Washing machine placement
16 Connecting to water supply
17 Connecting and securing the water discharge hose
18 Connecting the appliance to the power mains

PREPARING THE WASHING MACHINE BEFORE FIRST USE

19 BEFORE USING THE APPLIANCE FOR THE FIRST TIME

20 WASHING PROCESS, STEP BY STEP (1–6)
20 Step 1: Heed the labels on the laundry
21 Step 2: Preparing the washing process
23 Step 3: Choosing the washing programme
28 Step 4: Selecting additional functions
33 Step 5: Starting the washing programme
33 Step 6: End of the washing programme

STEPS OF THE WASHING PROCESS

34 INTERRUPTIONS AND CHANGING THE PROGRAMME

37 MAINTENANCE & CLEANING
37 Cleaning the dispenser tray
38 Cleaning the water supply hose, detergent dispenser housing, and rubber door gasket
39 Cleaning the pump filter
40 Cleaning the washing machine exterior

WASHING MACHINE CLEANING AND MAINTENANCE

41 TROUBLESHOOTING
41 What to do ...?
41 Troubleshooting and error table
46 Servicing

TROUBLE-SHOOTING

48 RECOMMENDATIONS FOR WASHING AND ECONOMIC USE YOUR WASHING MACHINE
51 CONSUPTION VALUES
52 PRODUCT INFORMATION
54 DISPOSAL

MISCELLANE-OUS

856532

SAFETY PRECAUTIONS

Carefully read the instructions for use before using the washing machine.

Please, do not use the washing machine without reading and understanding these instructions or use first.

These instructions for use of a washing machine are supplied with different types or models of washing machines. Therefore, they may include descriptions of settings or equipment that are not available in your washing machine.

Failure to observe the instructions for use or inappropriate use of the washing machine may result in damage to the laundry or the appliance, or injury to the user. Keep the instruction manual handy, near the washing machine.

Instructions for use are available on our website at www.gorenje.com.

This appliance is intended to be used in household and similar applications such as:

- staff kitchen areas in shops, offices and other working environments;
- farm houses;
- by clients in hotels, motels and other residential type environments;
- bed and breakfast type environments.

Follow the instructions for correct installation of the Gorenje washing machine and connection to the water and power mains (see chapter »INSTALLATION AND CONNECTION«).

Connection to water and power supply has to be executed by an adequately trained technician or expert.

Any repair and maintenance pertaining to safety or performance should be done by trained experts.

To avoid danger, **a damaged power** cord may only be replaced by the manufacturer, a service technician, or an authorized person.

Do not connect the washing machine to power mains using an external switching device such as a programme timer, or connect it to power mains that is regularly switched on and off by the power supply provider.

Do not connect the washing machine to an electrical outlet intended for an electric shaver or hair dryer.

Do not install the washing machine in a room where the temperature can drop to below 5°C, as washing machine parts may be damaged in case of water freezing.

The ventilation openings in the base of washing machine must not be obstructed by a carpet.

To connect the washing machine to water supply, make sure to use the supplied water supply hose and gaskets. Water pressure must be between 0.05 and 0.8 MPa (0.5–8 bar).

Always use a new water supply hose to connect the washing machine to water supply; do not reuse an old water supply hose.

The end of the water discharge hose should reach into a water drain line.

Before the start of the washing cycle, press the door on the indicated spot until it locks into place. The door cannot be opened during washing machine operation.

We recommend removing any impurities from the washing machine drum before the first wash using the Cotton 90°C programme (see PROGRAMME TABLE).

After the washing cycle, close the water tap and pull out the washing machine plug from the power socket.

Only use the washing machine for washing laundry, as described in the instruction manual. The machine is not intended for dry cleaning.

Only use agents for machine washing and care of laundry. We shall not be responsible for any damages or discolouration of gaskets and plastic parts resulting from incorrect use of bleaching or colouring agents.

When descaling, only use descaling agents with added anti-corrosion protection. (Only use non-corrosive descaling agents.) Follow the manufacturer's instructions. Finish the descaling process with several rinse cycles or by running the Drum clean (Self-cleaning programme) in order to remove any residual acid (e.g. vinegar etc.).

⚠ Do not use detergents that contain solvents as this could lead to release of poisonous gases, damage to the washing machine, and risk of fire and explosion.

No silver ions are released during the washing programme.

The washing machine is not intended for use by persons (including children) with physical or mental impairments, or persons with lacking experience and knowledge. These persons should be instructed about the use of the washing machine by a person responsible for their safety.

CHILD SAFETY

Before closing the washing machine door and running the programme, make sure there is nothing except laundry in the drum (e.g. if a child climbed into the washing machine drum and closed the door from the inside).

Keep the detergent and conditioner out of reach of children.

Activate the child lock. See chapter »CHOOSING THE SETTINGS/Child lock«.

Do not let children younger than three years come near the appliance, unless they are under constant supervision.

The washing machine is made in compliance with all relevant safety standards.
This washing machine may be used by children aged 8 years and above and by persons with reduced physical, sensory or mental capabilities or lack of experience and knowledge, but only if they are supervised during the use of the washing machine, if they have been provided relevant instructions regarding safe use of the washing machine, and if they understand the hazards of inappropriate use. Make sure children do not play with the appliance. Children may not clean the washing machine or perform any maintenance tasks without supervision.

DANGER OF HOT SURFACE ⚠

At higher washing temperatures, the door glass will heat up. Be careful to avoid burns. Make sure children do not play near the door glass.

The washing machine may only be used with the supplied power cord.

WASHING MACHINE DESCRIPTION

FRONT

1 Control unit
2 Start/pause button
3 Programme selector knob
4 On/off button
5 Dispenser tray
6 Door
7 Rating plate
8 Pump filter

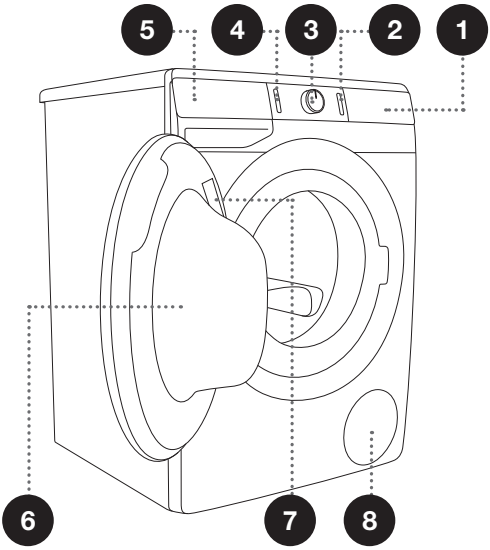

BACK

1 Water supply hose
2 Power cord
3 Water discharge hose
4 Adjustable feet

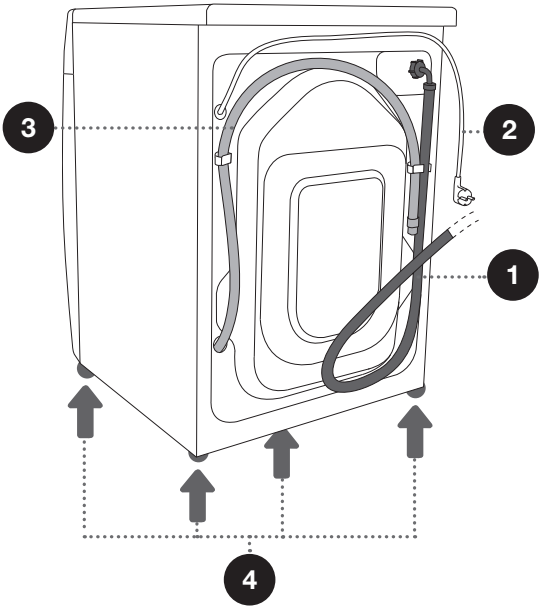

TECHNICAL SPECIFICATIONS

(DEPENDING ON THE MODEL)

Rating plate with basic information about the washing machine is located on the inner side of the washing machine door (see chapter »WASHING MACHINE DESCRIPTION«).

Maximum load	See rating plate		
Width	600 mm	600 mm	600 mm
Height	850 mm	850 mm	850 mm
Washing machine depth (a)	465 mm	545 mm	610 mm
Depth with door closed	495 mm	577 mm	640 mm
Depth with door open (b)	980 mm	1062 mm	1125 mm
Washing machine weight	X kg (depending on the model)		
Rated Voltage	See rating plate		
Nominal power	See rating plate		
Connection	See rating plate		
Water pressure	See rating plate		
Current	See rating plate		
Frequency	See rating plate		

Rating plate

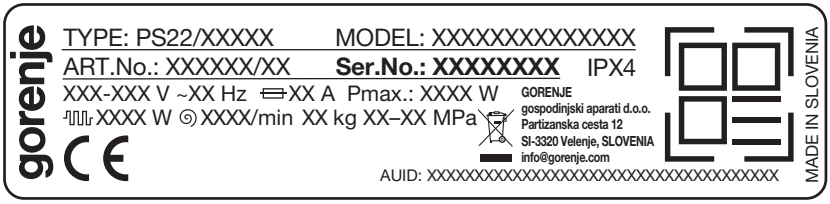

856532

CONTROL UNIT

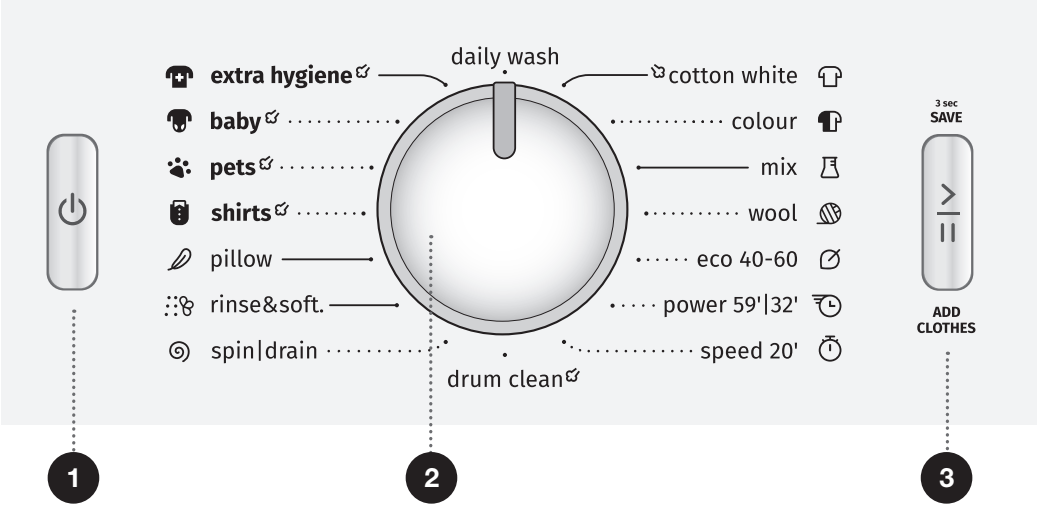

1 ON/OFF BUTTON
Use this button to turn the washing machine on and off, and to reset the washing programme.

2 PROGRAMME SELECTOR KNOB

3 START/PAUSE BUTTON
Use this button to start or pause a programme.

Upon start-up or during pause, the button backlight will flash; when the programme is started and in progress, it will be lit continuously.

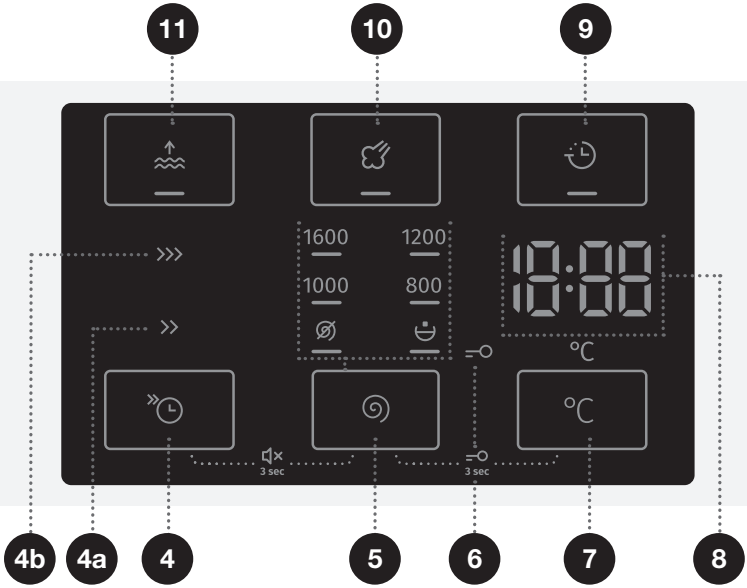

4 **FAST function**

4a FAST >>
4b SUPER FAST >>>
Shorter washing programme duration

5 **SPIN** (SPINNING RATE 1600/DRAIN /PUMP STOP)
Option to set the spinning rate

4+5 **Sound ON/OFF**
Press the positions 4+5 and hold them for 3 seconds.

6 **CHILD LOCK** symbol lighting

7 **WASHING TEMPERATURE** °C
Option to set washing temperature

5+7 **Child lock ON/OFF**
Press the positions 5+7 and hold them for 3 seconds.

8 The following is displayed on the **DISPLAY UNIT:**
- Available functions
- Time remaining to programme completion
- Information for the user

9 **DELAY END**
Option to set the time of washing programme completion

10 **STEAM**
Option to activate the laundry refresh function

11 **WATER+**
Option to set a higher water level

856532

INSTALLATION AND CONNECTION

Remove all packaging. When removing the packaging, make sure not to damage the appliance with a sharp object.

REMOVING THE BLOCKING RODS

⚠ Before the first use of the appliance, transport rods must be removed. A blocked washing machine may be damaged when it is switched on for the first time. Warranty shall be void in cases of such damage!

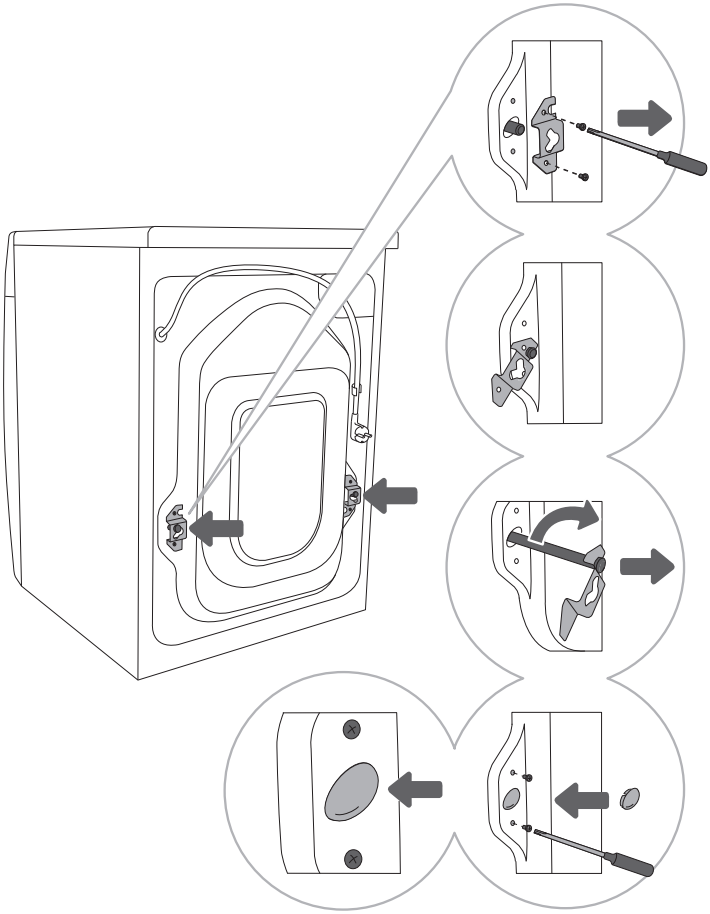

1 Move the hoses and undo the screws on the back of the washing machine.
Remove the two angular pieces.

2 Slide the angular pieces onto the grove in the blocking rod; before doing so, rotate the right angular piece to the opposite side.

3 Use the angular pieces to rotate the blocking rods by 90°and pull them out.

4 Cover the two holes through which the blocking rods were inserted with plastic plugs, and redo the screws that you undid in step 1. The plastic plugs are supplied in the bag with the washing machine instruction manual.

MOVING AND TRANSPORT AFTER INSTALLATION

If you wish to move the washing machine after it has been installed, the angular pieces and at least one blocking rods have to be re-installed to prevent vibration damage to the washing machine during transport (see chapter »INSTALLATION AND CONNECTION/Removing the blocking rods«). If you lost the angular pieces and the blocking rods, they can be ordered from the manufacturer.

SELECTING THE ROOM

Floor on which the washing machine is placed must have a concrete base. It should be clean and dry; otherwise, the washing machine may slide. Also, clean the bottom surface of adjustable feet.

The washing machine must stand level and stable on a solid base.

If the washing machine is placed on an elevated stable base, the washing machine has to be additionally secured against tipping.

ADJUSTING THE WASHING MACHINE FEET

Use a water scale and spanner No. 32 (for feet) and 17 (for the nut). The spanners are not supplied.

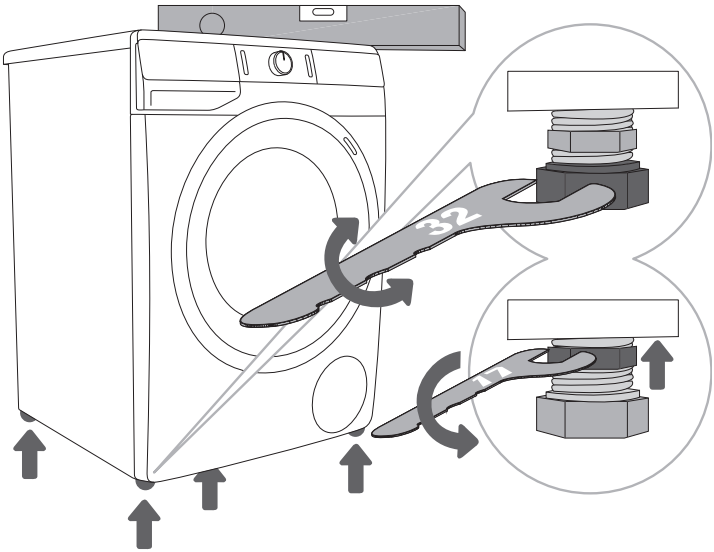

1 Level the washing machine in longitudinal and traverse direction by rotating the adjustable feet.

2 After adjusting the height of the feet, firmly tighten the jam nuts (counter nuts) using a spanner No 17, by turning them towards the bottom of the washing machine ⬆ (see figure).

856532

Incorrect levelling of the washing machine with the adjustable legs may cause vibration, appliance sliding across the room, and loud operation. Incorrect levelling of the washing machine is not subject to warranty.

Sometimes, unusual or louder noise may appear during appliance operation; these are mostly the result of improper installation.

WASHING MACHINE PLACEMENT

If you also have a Gorenje dryer of corresponding (same) dimensions, it can be placed on top of the Gorenje washing machine (in this case, vacuum feet must be used) or next to it (figures 1 and 3).
If your Gorenje washing machine is smaller (minimum depth 545 mm) than your Gorenje dryer, then the dryer support has to be purchased (figure 2). It is essential to use the vacuum feet! Additional equipment (dryer support (a), vacuum feet (b) and wall fixing bracket (c)) can be purchased at the service centre.
The surface on which the appliance is placed should be clean and level.
Gorenje washing machine onto which you intend to place the Gorenje dryer should hold the weight of the Gorenje dryer (see chapter »WASHING MACHINE DESCRIPTION/Technical information«).

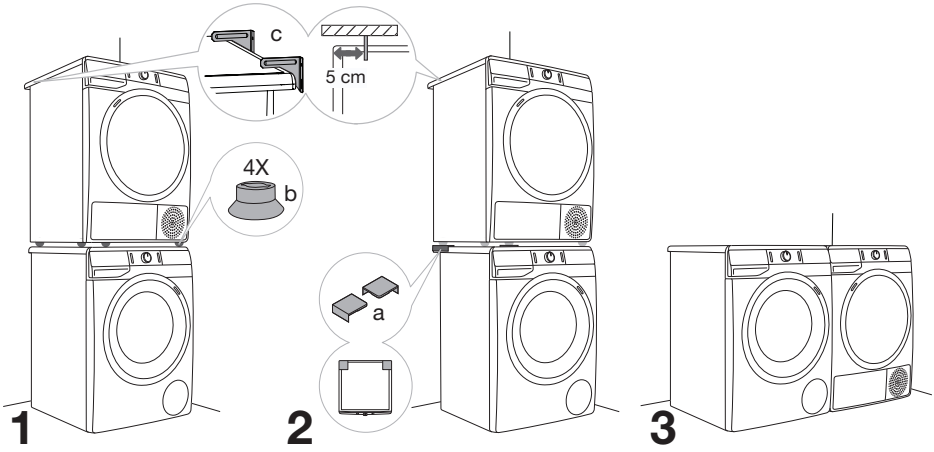

Washing machine installation clearances

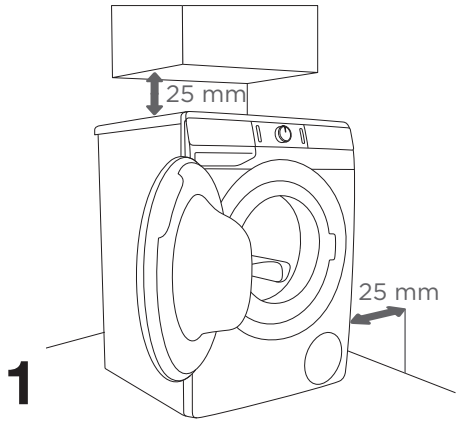

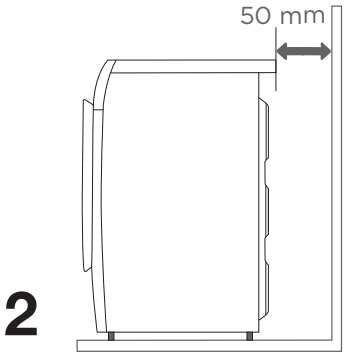

The washing machine may not be in contact with a wall or adjacent furniture. For optimum washing machine operation, we recommend observing the clearances from the walls as indicated in the figure.
In case of failure to observe the minimum required clearances, safe and correct washing machine operation cannot be ensured. Moreover, overheating can also occur (figures 1 and 2).

Installing the washing machine under a countertop is not recommended.

Opening the washing machine door (bird's-eye view)

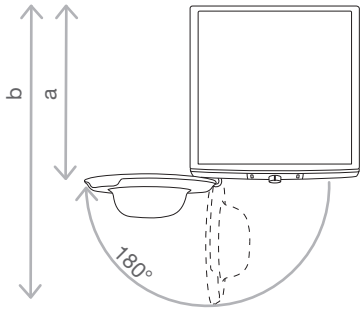

See chapter »WASHING MACHINE DESCRIPTION/Technical information«).

a = Washing machine depth
b = Depth with door open

856532

CONNECTING TO WATER SUPPLY

Attach the hose to the water tap by screwing it onto the thread.

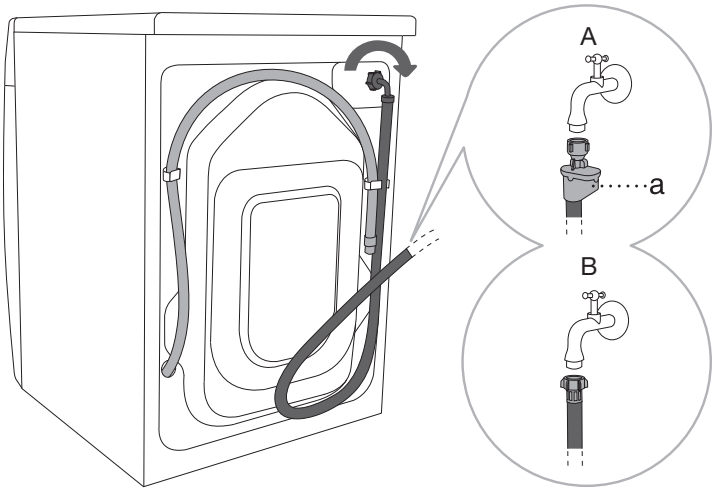

A AQUA - STOP (only with some models)

If an internal tube or hose is damaged, a shut-off system is activated that cuts the water supply to the washing machine. In such case, the control glass (a) will turn red. Replace the water supply hose.

B REGULAR CONNECTION

For normal washing machine operation, the pressure in the water mains should be between 0.05 and 0.8 MPa (0.5–8 bar). Minimum dynamic water pressure can be determined by measuring the water flow. In 30 seconds, 1.2 litres of water should flow from a fully open tap.

Tighten the water supply hose by hand, firmly enough for the hose to have a good seal (max. 2 Nm). After connecting the hose, the seal must be checked for any leaks. Do not use pliers or similar tools when connecting the hose as this could damage the nut thread.

Only use the water supply hose supplied with the appliance. Do not use any used or other hoses.

When connecting the water supply hose, make sure to connect it in a way that allows adequate and unobstructed water supply.

CONNECTING AND SECURING THE WATER DISCHARGE HOSE

Feed the water discharge hose into a washbasin or a bathtub, or connect it directly to a drain (minimum drain connection diameter is 4 cm). The vertical distance from the floor to the end of the discharge hose may be no more than 100 cm and no less than 60 cm. It can be attached in three ways (A, B, C).

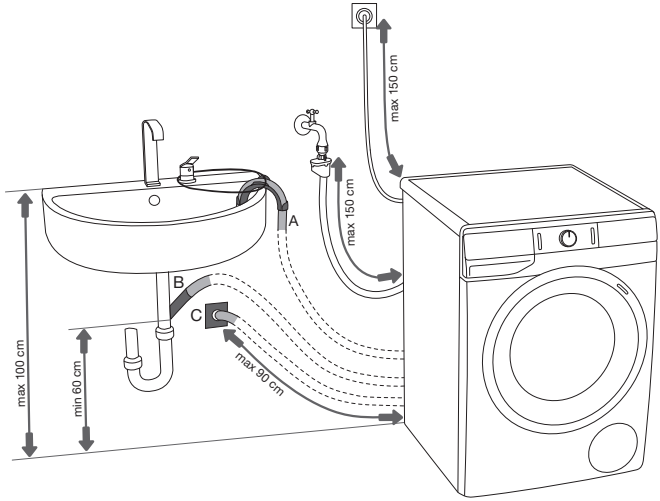

A Discharge hose end may be placed over a washbasin or a bathtub. B Use a string fed through the opening in the elbow support to attach the hose and prevent it from slipping to the floor.

B Discharge hose may also be attached directly to the washbasin drain.

C Discharge hose can also be attached to a wall drain with a trap; such trap should be properly installed to allow cleaning.

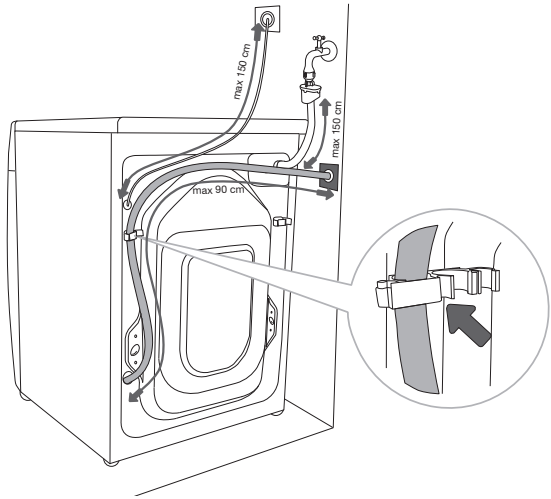

D The discharge hose has to be attached and affixed to the pin on the back of the washing machine, as shown in the figure.

If the discharge hose is not correctly attached, safe and correct washing machine operation cannot be ensured.

856532

CONNECTING THE APPLIANCE TO THE POWER MAINS

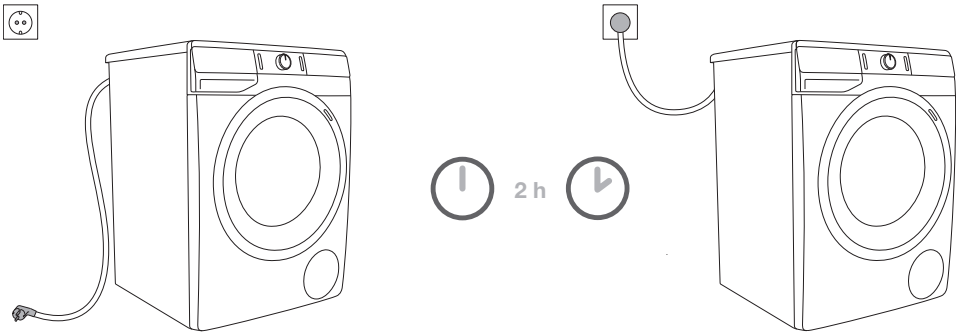

⚠ **Before connecting the washing machine to the power mains, wait for at least 2 hours until it reaches room temperature.**

Connect the washing machine to a grounded power outlet. After installation, the wall outlet should be freely accessible. The outlet should be fitted with an earth contact (in compliance with the relevant regulations).

Information on your washing machine is indicated on the rating plate (see chapter »WASHING MACHINE DESCRIPTION/Technical information«).

⚠ **We recommend using over-voltage protection to protect the appliance in case of a lightning strike.**

⚠ The washing machine may not be connected to the power mains using an extension cord.

Do not connect the washing machine to an electrical outlet intended for an electric shaver or hair dryer.

Any repair and maintenance pertaining to safety or performance should be done by trained experts.

BEFORE USING THE APPLIANCE FOR THE FIRST TIME

Make sure the washing machine is disconnected from the power mains; then, open the door towards you (figures 1 and 2).

Before first use, clean the washing machine drum with a soft moist cotton cloth and water, or use the Cotton 90°C programme. There should be no laundry in the washing machine drum; the drum should be empty (figures 3 and 4).

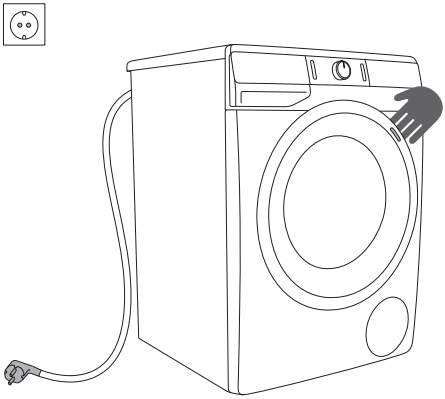

1

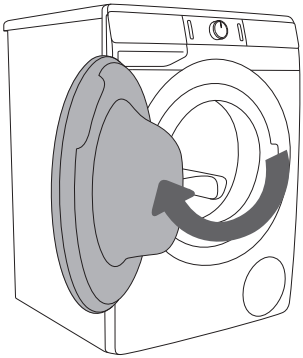

2

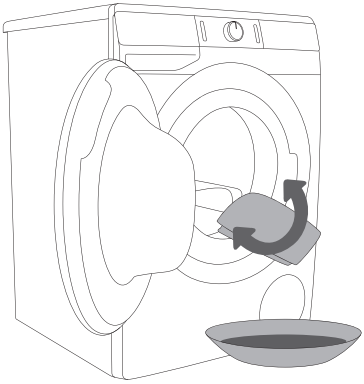

3

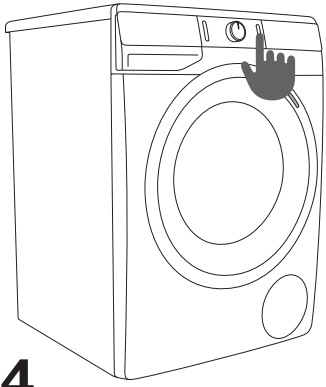

4

⚠ Do not use any solvents or cleaning agents that could damage the washing machine (please observe the recommendations and warnings provided by the cleaning agent manufacturers).

856532

WASHING PROCESS, STEP BY STEP (1–6)

STEP 1: HEED THE LABELS ON THE LAUNDRY

Normal wash; Sensitive laundry	Max. washing temp. 95°C 95 95	Max. washing temp. 60°C 60 60	Max. washing temp. 40°C 40 40	Max. washing temp. 30°C 30 30	Hand wash only	Do not wash
Bleaching	Bleaching in cool water c1			Bleaching not allowed		
Dry cleaning	Dry cleaning with all agents A	Petroleum solvent R11, R113 P		Dry cleaning in kerosene, pure alcohol, and R113 F	Dry cleaning not allowed	
Ironing	Hot ironing, max. 200°C	Hot ironing, max. 150°C		Hot ironing, max. 110°C	Ironing not allowed	
Drying	Dry flat (place on a flat surface)	Drip dry Line dry		High temperature Low temperature	Do not tumble dry	

STEP 2: PREPARING THE WASHING PROCESS

1. Sort the laundry by type of fabric, colour, soiling, and allowed washing temperature (see PROGRAMME TABLE).
2. Wash the laundry that sheds a lot of fibre or lint separately from other laundry.
3. Close the buttons and zippers, tie any ribbons, and turn the pockets inside out; remove any metal clips that could damage the laundry and washing machine interior, or clog the drain.
4. Place very sensitive clothes and small items in a special-purpose laundry washing bag. (The special purpose laundry bag is available as an optional accessory.)

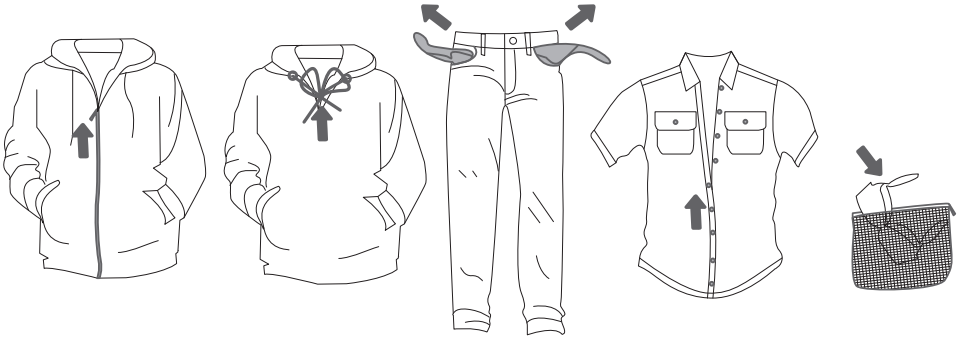

SWITCHING ON THE WASHING MACHINE

Use the power cord to connect the washing machine to power mains, and connect the washing machine to water supply.
Press the (1) **ON**/OFF button to switch on the washing machine (figures 1 and 2).

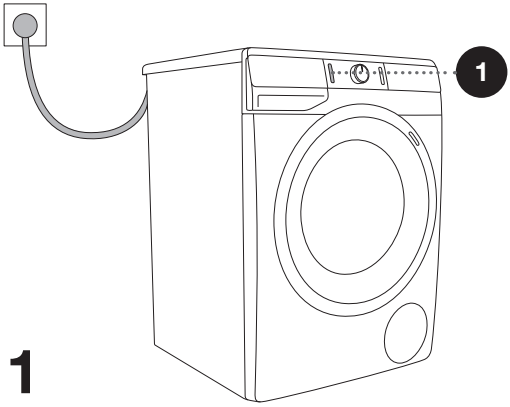

1

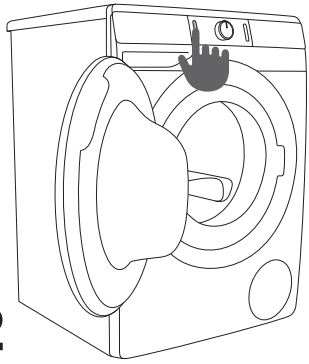

2

LOADING THE WASHING MACHINE

Open the washing machine door by pulling the handle towards you (figure 1).
Insert the laundry into the drum (after making sure the drum is empty) (figure 2).
Make sure that no garment is stuck between the door and the rubber gasket. Close the washing machine door (figure 3).

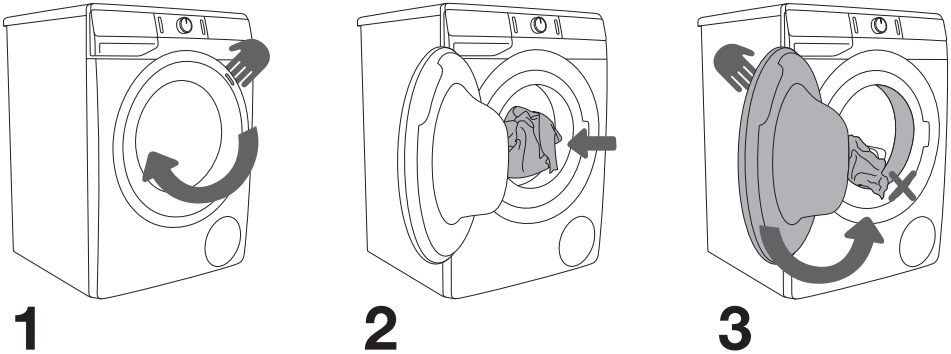

Do not overload the drum! See PROGRAMME TABLE and observe your nominal load as indicated on the rating plate.
If the washing machine drum is too full, the laundry will not be washed as thoroughly.

STEP 3: CHOOSING THE WASHING PROGRAMME

Choose the **programme** by rotating the programme selector knob (2) to the left or to the right (depending on the type of laundry and how heavily soiled it is). See PROGRAMME TABLE.

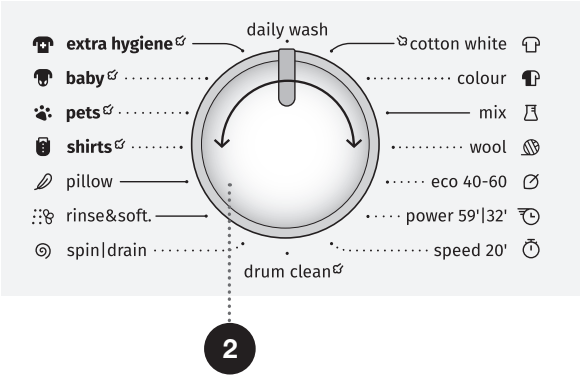

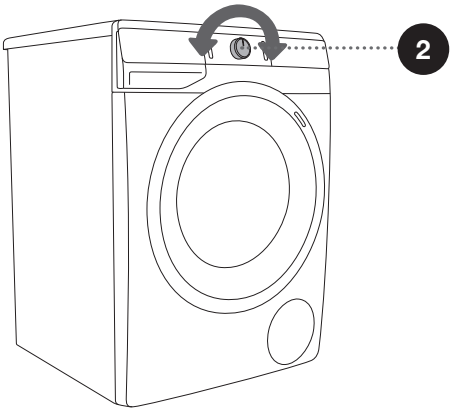

During operation, the programme selector knob (2) will not rotate automatically.

Washing programmes are comprehensive programmes that include all washing stages, including softening and spinning (this does not apply to Partial programmes).

Partial programmes are independent programmes. Use them when you feel you do not need the entire washing programme.

PROGRAMME TABLE

Programme	Max. load	Maximum spinning rate	Programme description
Cotton white 40°C–90°C	* MAX	MAX [1]	Programme for washing white cotton laundry, towels, bed linen, T-shirts ... The temperature can be set separately; therefore, observe the instructions indicated on the clothing. Spinning speed can be set to your preference. Programme duration and amount of water will be adjusted to the amount of laundry. To treat your laundry with steam, press the button before the start of the wash.
Cotton colour 20°C–90°C	* MAX	MAX [1]	Programme for coloured laundry made of cotton. The temperature can be set separately; therefore, observe the instructions indicated on the clothing. Spinning speed can be set to your preference. Programme duration and amount of water will be adjusted to the amount of laundry.
Mix (Mixed laundry/ Synthetics) 20°C–60°C	3,5 kg	1200 [2]	Washing programme for delicate clothing made of synthetic and mixed fibres or viscose, and for simple care of cotton. Observe the instructions indicated on the clothing.
Wool 20°C–40°C	2 kg	800	Gentle washing programme for washing wool, silk, and clothes that require manual washing. Maximum temperature is 40°C. This programme has a short spinning cycle. Top spinning speed available is 800 rpm.
Eco 40-60	* MAX	MAX [1]	Washing cycle, which is able to clean normally soiled cotton laundry declared to be washable at 40°C or 60°C, together in the same cycle. This programme is used to assess the compliance with the EU ecodesign legislation.
Power 59´/32´ 40°C	4 kg	MAX [1]	Programme for smaller amounts of lightly soiled laundry. The washing programme includes intensive tumbling and maximum spinning rate.
Speed 20´ 30°C	2,5 kg	1000 [2]	Quick washing programme for lightly soiled laundry that only needs refreshing.

* Maximum declared load (MAX) - see rating plate
** Half load (1/2)
/ Any load (0 kg – MAX kg)
[1] Maximum spinning rate (MAX) - see rating plate
[2] Depending on the model

Programme		Max. load	Maximum spinning rate	Programme description
	Drum clean (Self-cleaning programme)	0 kg		This programme is used for cleaning the drum and removing the residue of detergent and bacteria. To select the programme, rotate the programme selector knob to the left or to the right to the Drum clean (Self-cleaning programme) position. Other extra functions cannot be selected. The drum has to be empty. **Do not add detergent and softener!** You can add some distilled (spirit) vinegar (approx. 2 dl) or sodium bicarbonate (1 tablespoon, or 15 g). We recommend running the programme at least once a month.
	Spin/Drain (Spinning rate/Drain) (Partial programme)	/	MAX [1]	Use the programme when you only wish to spin the laundry. If you only wish to pump out the water from the washing machine, press the SPIN (5) button to select (drain).
	Rinse&Softening (Partial programme)	/	MAX [1]	For softening, starching, or impregnating the washed laundry. It can also be used as a rinse cycle, but do not add any detergent or softener/conditioner. It is completed with an additional rinse. You can also choose **WATER+** by selecting the extra function.
	Pillow 20°C–40°C	** (1/2)	800	Washing programme is suitable for pillows and jackets stuffed or padded with down. The wash takes place at a low temperature, with a large amount of water, with gentle tumbling, and a gentle spin cycle.
	Shirts (Shirts with steam) 20°C–40°C	3,5 kg	1200 [2]	This program is intended for washing garments made of cotton, microfibres and synthetics; for washing collars and cuffs. The wash takes place at a low temperature, with a greater amount of water and gentle tumbling. Preset spinning speed is 800 rpm. To treat your laundry with steam, press the button before the start of the wash.

* Maximum declared load (MAX) - see rating plate
** Half load (1/2)
/ Any load (0 kg – MAX kg)
[1] Maximum spinning rate (MAX) - see rating plate
[2] Depending on the model

856532

Programme		Max. load	Maximum spinning rate	Programme description
	Pets **(Pet hair removal)** 30°C–60°C	* MAX	MAX [1]	During this programme, pet hair is removed from your garments. The washing programme includes an automatic prewash and additional rinses. Prewash is already included in the programme. To treat your laundry with steam, press the button before the start of the wash. After the washing programme completion, clean the glass on the washing machine door and the pump filter in which pet hair could be trapped. We recommend running the Drum clean (Self-cleaning programme) programme after the wash, in order to thoroughly remove any pet hair from the washing machine.
	Baby **(Baby clothes)** 40°C–90°C	* MAX	MAX [1]	This programme is used for washing clothes that require special care, such as baby clothes or clothes for people suffering from skin allergies. We recommend turning the garments inside out as this will also thoroughly wash out the skin scales or residues of skin treatment products. The programme is a combination of a prolonged heating and an extra rinse that removes any detergent residue. The washing temperature is maintained. Prewash is already included in the programme. To treat your laundry with steam, press the button before the start of the wash.
	Extra hygiene 40°C–90°C	* MAX	MAX [1]	This washing programme is used for washing cotton garments that require special care, such as clothes for people with highly sensitive skin or allergies. We recommend turning the garments inside out, as this will also thoroughly wash out the skin and other residues. To treat your laundry with steam, press the button before the start of the wash.
	Daily wash 30°C	* MAX	MAX [1]	Washing programme automatically adjusts the duration of the main wash and the number of rinses depending on the amount of laundry in the machine. Use it for daily care of coloured garments made of cotton, synthetic fabrics and mixed/blended fabrics.

* Maximum declared load (MAX) - see rating plate
** Half load (1/2)
/ Any load (0 kg – MAX kg)
[1] Maximum spinning rate (MAX) - see rating plate
[2] Depending on the model

The most efficient programmes in terms of energy consumption are generally those that perform at lower temperatures and longer duration.

The noise and remaining moisture content are influenced by the spinning speed: the higher the spinning speed in the spinning phase, the higher the noise and the lower the remaining moisture content.

Add powder or liquid detergents according to the manufacturer's instructions, considering the washing temperature, washing program, how soiled the laundry is, and water hardness.
In case of excessive foaming in the washing machine or leak of foam through the detergent dispenser tray, the washed laundry must be rinsed thoroughly with a large amount of water. Choose a washing program, but do not add any detergent.

Maximum amount of laundry in kg (for the Cotton programme) is indicated on the washing machine rating plate (see chapter »WASHING MACHINE DESCRIPTION/Technical information«).

Maximum or nominal load applies to laundry prepared pursuant to the IEC 60456 standard.

For better washing effect, we recommend loading the drum to 2/3 when using the cotton programmes.

Low water temperature, low mains voltage and different washing loads may affect the washing time; the remaining time displayed is adjusted accordingly during the washing process.

Time optimization during the programme progress

In the early stage of the washing programme, the washing machine uses advanced technology to detect the amount of laundry. After load detection, the washing machine adjusts the programme duration.

WASHING PROGRAMS WITH STEAM

Adding steam during the last washing step loosens the laundry, slightly disinfects it and eliminates some allergens. After using such program, the laundry will be soft, supple and fresh, and it will require less ironing.
Use of steam (press the 10 button) also allows omitting or reducing the amount of conditioner.
Fort better effect of steam on the laundry, we recommend and half load.

STEP 4: SELECTING ADDITIONAL FUNCTIONS

Most programmes feature basic settings, but these settings can be changed.

Adjust the settings by pressing the relevant function button (before pressing the (3) START/PAUSE button).
Functions that cannot be changed with the selected washing programme are partly lit (dimmed).
Certain settings cannot be selected with some programmes. Such settings will not be lit, and the button will flash when pressed (see FUNCTION TABLE).

Description of function indicators for selected washing programme:

- **Lit** (Basic/preset setting);
- **Dimmed** (Functions that can be adjusted) and
- **Unlit** (Functions that cannot be selected).

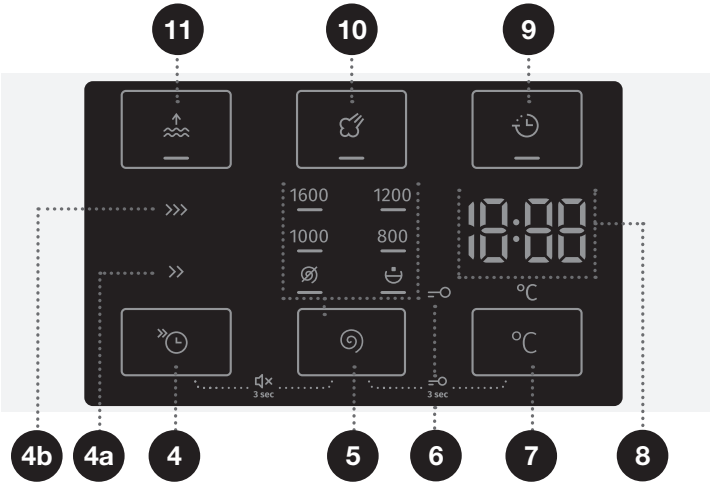

4

FAST »

When the **FAST** » function is activated, the washing programme will be carried out with a shorter washing duration.
Two options are available. Signal light on the selected washing method is on (**FAST** >> (4a) or **SUPER FAST** >>> (4b)).
We recommend a half-load for the Cotton programme.

5

SPIN (SPINNING RATE/DRAIN/PUMP STOP)

To adjust the spinning rate. Every programme (except for Drum Clean (Self-cleaning programme)) has a preset spinning rate that can be adjusted by pressing on position (5) **SPIN** (SPINNING RATE/DRAIN/ PUMP STOP).
If you select draining without spinning, the symbol will appear on the display unit.
If you select »Pump stop«, the symbol will appear on the display unit.
Select the »Pump stop« function when you wish the laundry to stay soaked in the water from the last rinse cycle in order to prevent it from creasing when you are unable to take it from the washing machine immediately after the washing programme is complete. You may set the desired spinning rate. To continue the program, press the (3) **START**/ PAUSE button that is lit. Water will be drained (pumped out) and the final spin cycle will be run.

7

WASHING TEMPERATURE °C

Changing the temperature for the selected program.
Each program has a preset temperature that can be changed by pressing the position (7) °C **WASHING TEMPERATURE**.
The temperature is displayed on the display unit (8) above the button.

9

DELAY END

Press on the position (9) **DELAY END** to delay the programme completion time by up to 24 hours.
Settings procedure:

- Select the desired programme and extra functions.
- Press the position (9) **DELAY END** to activate the function.
- Repeatedly press this position to set the desired programme completion time (with 30-minute increments up to 6 hours, and 1-hour increments thereafter, up to 24 hours.)
- To activate the function, press the (3) **START**/PAUSE button.

Washing machine starts counting down the set time. When the countdown reaches the programme duration (e.g. 2:30), the washing programme starts automatically.
To interrupt or change the programme completion time, press the (1) ON/OFF button. To quickly cancel the programme completion delay, press the position(9) **DELAY END** and hold it for 3 seconds. The washing programme will resume.

Example of function setting:
It is now 9 PM, and you wish the washing programme to be completed at 6 AM the next morning. In this case, set the **DELAY END** time to 9 hours.

10

STEAM

Adding a 20-minute steam cycle at the end of the program will soften and disinfect your garments, and reduce or do away with the need for ironing and using softener/conditioner for your laundry.

11

WATER+

Use this function to wash with a larger amount of water on some programmes.

Some settings cannot be selected with certain programmes. Such functions will not be lit on the display unit, and when the corresponding button is pressed, an acoustic signal will be emitted and the light on the button will flash (see FUNCTION TABLE).

Activate/deactivate the functions by pressing the desired function (before pressing the (3) START/PAUSE button). An indicator will light up next to the selected functions.

If you have set the **DELAY END** function and you are using liquid detergent, we do not recommend setting a programme without a pre-wash.

5 + 7

CHILD LOCK

A safety feature. To activate the child lock, simultaneously press the (5) **SPIN** (SPINNING RATE/DRAIN/PUMP STOP) and (7) **WASHING TEMPERATURE** °C positions and hold them for at least three seconds. Countdown timer is displayed on the display unit. The selection will be confirmed by an acoustic signal and by a signal light (the symbol (6) will be lit). Follow the same procedure to deactivate the child lock. As long as the child lock is activated, programme, settings, or additional functions cannot be changed.
Child lock remains active even after the washing machine is switched off. For safety reasons, the child lock does not prevent switching off the washing machine with the (1) ON/OFF button. To select a new programme, the child lock must first be deactivated.

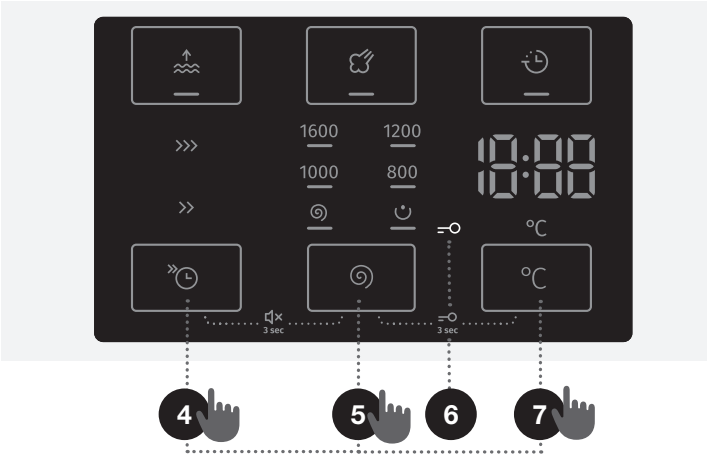

4 + 5

SOUND OFF

To turn off the sounds, simultaneously press the positions (4) **FAST** and (5) **SPIN** (SPINNING RATE/DRAIN/PUMP STOP) and hold them for at least 3 seconds.
To reactivate the sound, simultaneously press the positions (4) and (5) and hold them for at least 3 seconds.
If you turn off the sounds, then there is no audible signal at the end of a washing programme.

When the washing machine is switched off, all extra functions return to their basic or custom settings, except for the acoustic signal setting.

FUNCTION TABLE

Programmes	FAST	SUPER FAST	DELAY END	STEAM	WATER+	SPIN (SETTING THE SPINNING RATE)	PUMP STOP
Cotton white 40°C–90°C	•	•	•	•	•	•	•
Cotton colour 20°C–90°C	•	•	•		•	•	•
Mix (Mixed laundry/Synthetics) 20°C–60°C	•	•	•		•	•	•
Wool 20°C–40°C	•	•	•		•	•	•
Eco 40-60						•	•
Power 59´/32´ 40°C	•	•	•		•	•	•
Speed 20´ 30°C			•			•	•
Drum clean (Self-cleaning programme)			•	•		•	•
Spin/Drain (Spinning rate/Drain) (Partial programme)						•	
Rinse&Softening (Partial programme)					•	•	•
Pillow 20°C–40°C	•	•	•		•	•	•
Shirts (Shirts with steam) 20°C–40°C	•	•	•	•	•	•	•
Pets (Pet hair removal) 30°C–60°C	•	•	•	•	•	•	•
Baby (Baby clothes) 40°C–90°C	•	•	•	•	•	•	•
Extra hygiene 40°C–90°C	•	•	•	•	•	•	•
Daily wash 30°C	•	•	•		•	•	•

• Additional functions can be used

856532

STEP 5: STARTING THE WASHING PROGRAMME

Press the (3) **START**/PAUSE button.

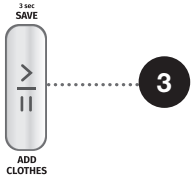

TIME REMAINING TO PROGRAMME COMPLETION or **DELAY END** time (if set) will appear on the display.
Symbols will be lit on the selected functions.
After pressing the (3) START/PAUSE button, the spinning rate can be adjusted (except in the case of the Drum clean (Self-cleaning programme) and **SPIN** ⊙ (SPINNING RATE/DRAIN/PUMP STOP)) and child lock can be activated or deactivated, while other settings cannot be changed.

If the **TIME REMAINING UNTIL PROGRAMME COMPLETION** flashes three times on the display unit, and there is an audible signal, this means that the washing machine door is open or not closed tightly. Close the washing machine door and press the (3) button **START**/PAUSE again to resume the washing programme.

STEP 6: END OF THE WASHING PROGRAMME

The washing machine will indicate the end of the washing programme with an acoustic signal and End will appear on the display until the washing machine switches into low standby mode or switches off. After 5 minutes, the End sign will no longer be displayed.

1. Open the washing machine door.
2. Take the laundry from the drum.
3. Wipe the rubber door gasket and the door glass.
4. Close the door!
5. Shut off the water supply tap.
6. Switch off the washing machine (press the (1) ON/**OFF** button).
7. Unplug the power cord from the outlet.

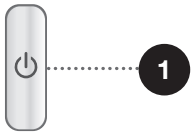

INTERRUPTIONS AND CHANGING THE PROGRAMME

MANUAL INTERRUPTION

To pause and cancel the washing programme, press the (1) ON/OFF button. Signal lights will flash on the display. At the same time, the washing machine pumps the water out of the washing machine drum. When the water is pumped out, washing machine door will be unlocked. If the water in the washing machine is hot, the washing machine will automatically cool it and pump/drain it out.

PERSONAL SETTINGS

Basic or default settings for each washing programme can also be changed. When you select the washing programme and Additional functions, the combination can be stored by pressing the (3) START/PAUSE button and holding it for 3 seconds (the time is counted down on the display unit). S C will appear on the display.
The programme will remain stored until it is changed using the same procedure.
Personal settings can also be reset to factory settings in the user menu.

ADAPTTECH

When a washing programme setting is used three times in a row, this setting is stored as default and will always be suggested when you select that washing programme – this is called the **ADAPT**TECH function. If you manually store the settings of a washing programme, the **ADAPT**TECH function on this washing programme is deactivated.

PERSONAL SETTINGS MENU

Switch on the washing machine by pressing the (1) **ON**/OFF button. Simultaneously press the (4) **FAST** and (7) °C **WASHING TEMPERATURE** positions to open the Personal Settings Menu. Signal lights for **STEAM** and **WATER+** will light up on the display unit. Number 1 will appear on the LED display, which also indicates the settings function. Rotate the programme selector knob (2) to the left or to the right to choose the function to change. Number 1 indicates sound settings and number 2 indicates resetting of Personal programme settings to factory defaults. If the desired settings are not selected in 20 seconds, the programme will automatically return to main menu. Press the (5) **SPIN** (SPINNING RATE/DRAIN/PUMP STOP) position to confirm the desired functions and their settings; press the (4) **FAST** position to go back one step. Acoustic signal volume can be set at four levels (0 means the sound is off; 1 means that the button sound is activated; 2 means low volume, and 3 means high volume). Choose the volume level by rotating the programme selector knob (2) to the left or to the right. The lowest setting means that the acoustic signal is switched off.

PAUSE BUTTON

The washing programme can always be stopped by pressing the (3) START/**PAUSE** button. The washing programme is **temporarily paused** when the time remaining until programme completion is flashing on the display unit. If there is no water in the drum and water temperature is not too high, then the door will unlock after a certain period of time, and they can be opened. To resume the washing program, first close the door and then press the key (3) **START**/PAUSE button.

ADDING/REMOVING LAUNDRY DURING WASHING MACHINE OPERATION

After a certain period of time, the washing machine door can be opened if the water level and temperature are below a predefined threshold.

If the conditions below are met, then the electronic door lock is released and the washing machine door can be opened; Add will appear on the display unit:

- water temperature in the drum has to be suitable,
- water level in the drum has to be below a certain value.

In order to add or remove laundry from the washing machine during programme operation, proceed as follows:

1. Press the (3) START/**PAUSE** button.
2. If all conditions for release of electronic door lock are met, then you can open the washing machine door and add or remove laundry from the drum.
3. Close the washing machine door!
4. Press the (3) **START**/PAUSE button.

The washing program will resume.

If you add a considerable amount of laundry during the wash, the laundry could be washed less effectively, since the washing machine initially sensed a lower weight of the load of laundry and added a smaller amount of water. Insufficient amount of water relative to the amount of laundry could also cause damage to the laundry (rubbing of dry laundry),
and washing time can be longer.

Washing time will resume from the point at which the washing programme was interrupted.

ERRORS

In case of an error or fault, the programme will be interrupted.
An acoustic signal will warn about such occurrence (see TROUBLESHOOTING AND ERROR TABLE), and the error will be indicated on the display unit (E:XX).

POWER SUPPLY FAILURE

In case of a power supply failure, the washing programme is interrupted. When power supply is restored, the washing programme is resumed from the point at which it was interrupted. Upon completion of the washing cycle, End / PF will alternate on the display unit. This informs the user about a power supply failure and on the effect on the execution of the washing programme.
Washing time will resume from the point at which the washing programme was interrupted.

OPENING THE DOOR (PAUSE/CANCEL/CHANGE PROGRAMME)

Washing machine door can be opened, if the water level in the machine is low enough and if the water temperature is not excessively high.

If the washing machine is not connected to the power mains or in case of a power supply failure during the programme execution, then the washing machine door cannot be opened.
In such case, the washing machine has to be properly connected, or a service technician should be contacted.

DISPLAYING THE NUMBER OF COMPLETED WASH CYCLES

(depending on the model)

If you disconnect the appliance from the power supply, wait for 10 seconds, and then reconnect the power cord, information on the number of completed wash cycles is displayed on the display unit for 3 seconds. After 3 seconds, the appliance switches to standby mode.

MAINTENANCE & CLEANING

⚠ **Before cleaning, unplug the washing machine from the power mains.**

Children should not clean the washing machine or perform maintenance tasks without proper supervision!

CLEANING THE DISPENSER TRAY

The dispenser tray should be cleaned at least twice per month.

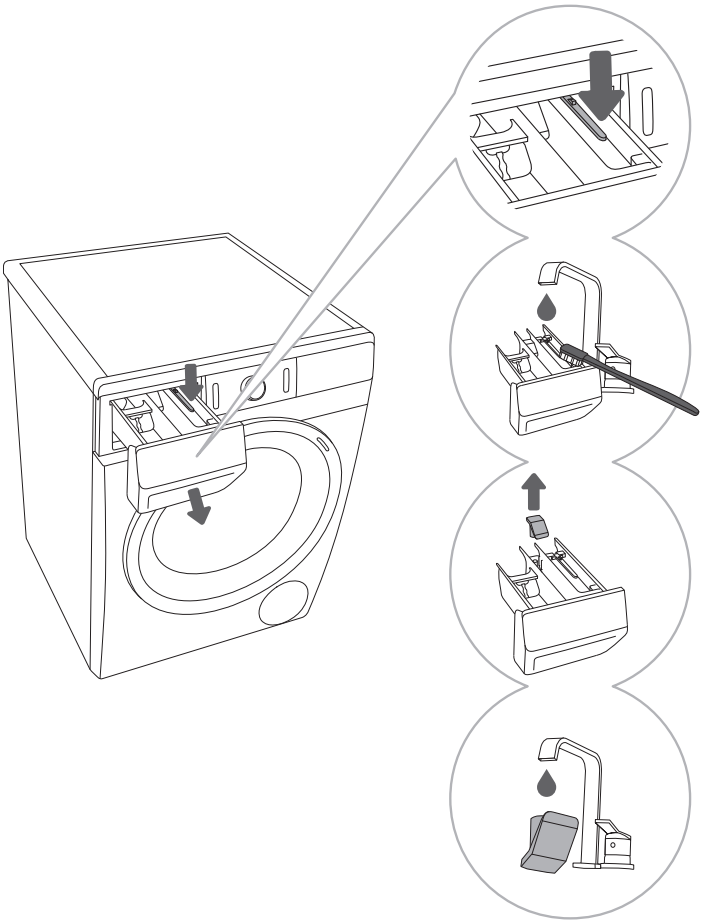

1 To remove the dispenser tray from the housing, press the small tab.

2 Clean the dispenser tray under running water using a brush, and dry it. Also, remove any detergent residue from the bottom of the housing.

3 If required, remove and clean the plug cap.

4 Clean the plug cap under running water and replace it.

Do not wash the dispenser tray in a dishwasher.

CLEANING THE WATER SUPPLY HOSE, DETERGENT DISPENSER HOUSING, AND RUBBER DOOR GASKET

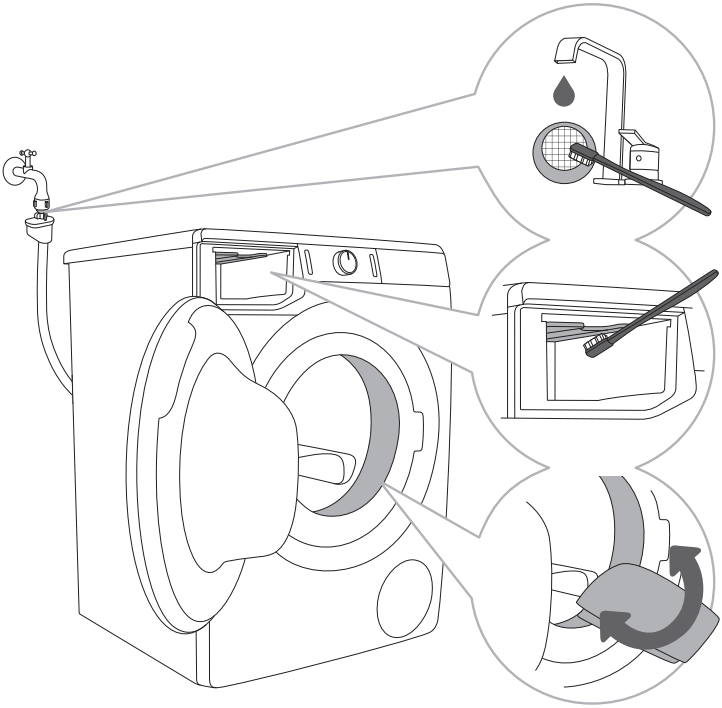

1 Clean the net filter often under running water.

2 Use a brush to clean the entire washing machine rinsing section, especially the nozzles on the upper side of the rinsing chamber.

3 After every wash, wipe the rubber door seal and remove foreign object from it to extend its useful life.

CLEANING THE PUMP FILTER

During cleaning, some water may be spilled. It is therefore recommended to place an absorbent cloth on the floor.

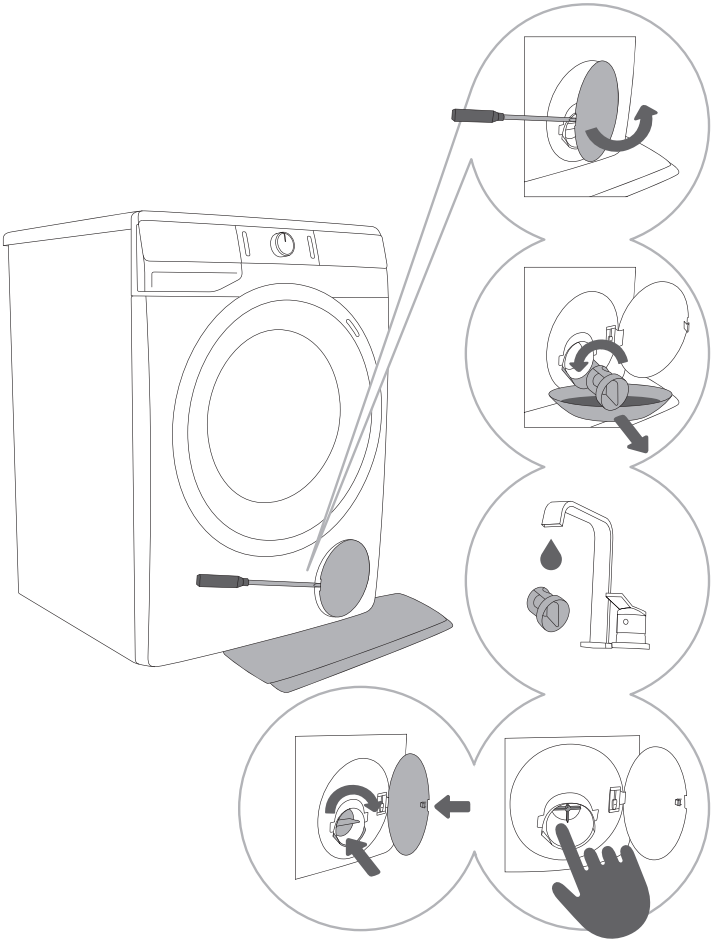

1 Open the pump filter cap using a suitable tool (flat screwdriver or a similar tool).

2 Pull out the water outlet funnel before cleaning the pump filter.
Rotate the pump filter slowly in the counter-clockwise direction.
Pull out and remove the pump filter to allow the water to slowly drain.

3 Clean the pump filter thoroughly under running water.

4,5 Remove all and any objects and impurities from the filter housing and the pump propeller.
Replace the pump filter as shown in the figure and fasten it by rotating in the clockwise direction.
For a good seal, the filter gasket surface should be clean.

The pump filter must be occasionally cleaned, especially after washing very fleecy, woolly, or very old laundry.

CLEANING THE WASHING MACHINE EXTERIOR

⚠ **Always disconnect the washing machine from the power mains before cleaning.**

Clean the washing machine exterior and display unit using a soft damp cotton cloth and water.

⚠ Do not use any solvents or cleaning agents that could damage the washing machine (please observe the recommendations and warnings provided by the cleaning agent manufacturers).

Do not clean the washing machine with a jet of water!

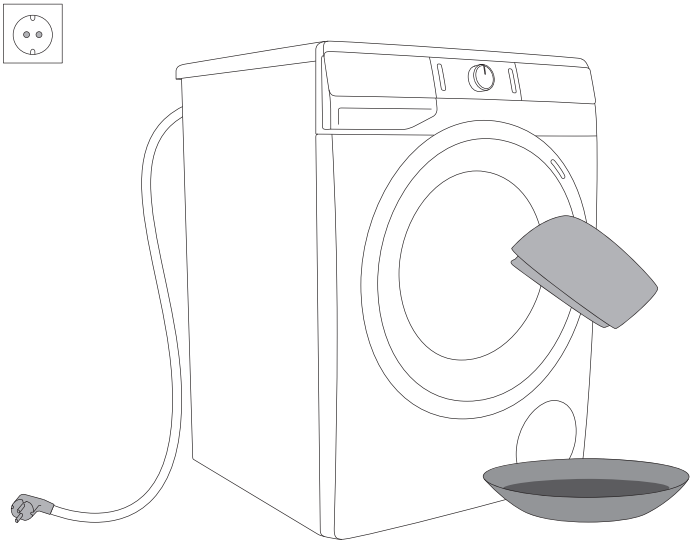

TROUBLESHOOTING

WHAT TO DO ...?

The washing machine shall automatically control the operation of particular functions during the washing cycle. If any irregularity is identified, this will be indicated by reporting (E:XX) on the display. The washing machine will report the error until it is switched off. Disturbances from the environment (e.g. the power grid) may result in various error reports (see TROUBLESHOOTING TABLE).
In such case:

- Switch off the washing machine and wait for a few seconds.
- Switch on the washing machine and repeat the washing programme.
- Most errors during operation can be resolved by the user (see TROUBLESHOOTING TABLE).
- If the error persists, call an authorized service unit.
- Repairs may only be carried out by an adequately trained person.

All the errors that te user can see on the user interface are listed below.

TROUBLESHOOTING AND ERROR TABLE

Errors indicated on the display unit may include the following:

Problem/ error	Indication on the display unit and problem description	What to do?
E:00	**Incorrect settings**	Restart the programme. If the error reoccurs, call a service technician.
E:01	**Temperature sensor error**	Inlet water too cold. Repeat the washing programme. If the washing machine reports this error again, call a service technician.
E:02	**Door lock error.**	Make sure the washing machine door is closed. Unplug the power cord from the outlet; then, plug the power cord back into the outlet and switch on the washing machine. If the error reoccurs, call a service technician.
E:03	**Water filling error.**	Check the following: • is the water inlet valve open, • is the filter on the water supply hose clean, • is the water supply hose deformed (clipped, clogged etc.), • is the pressure in the water mains between 0.05 and 0.8 MPa (0.5–8 bar). Then, press the (3) **START**/PAUSE button to resume the programme. If the error reoccurs, call a service technician.

Problem/ error	Indication on the display unit and problem description	What to do?
E:06	**Water heating error**	Restart the programme. If the error reoccurs, call a service technician.
E:07	**Water draining error**	Check the following: • is the pump filter clean, • is the discharge hose clogged, • is the drain clogged, • if the discharge hose placed is placed below the maximum and above the minimum height (see chapter »INSTALLATION AND CONNECTION/ Connecting and securing the water discharge hose«); then, press the (3) **START**/PAUSE button again. If the error reoccurs, call a service technician.
	Excessive amount of detergent	Too much detergent may cause excessive foaming in the drum. See description for Fd.
E:09	**Water leak detected in the washing machine area**	Turn off the washing machine and turn it back on. Inspect the exterior of the appliance. If you do not observe any leaks, you can continue to use the washing machine.
E:10	**Water level sensor error**	Unplug the power cord from the outlet; then, plug the power cord back into the outlet and switch on the washing machine. If the error reoccurs, call a service technician.
E:11	**Water overflow**	If there is water in the drum that exceeds a certain level, and an error is reported on the display unit, the washing program will be interrupted and water will be pumped out of the washing machine. Restart the programme. If the error reoccurs, call a service technician. If there is water in the drum that exceeds a certain level, and an error is reported on the display unit, while the washing machine continues to add water, close the water tap and call a service technician.
	Excessive amount of detergent	Too much detergent may cause excessive foaming in the drum. See description for Fd.
E:12	**Motor control error**	Manually redistribute the laundry (stuck or tangled laundry) and repeat the washing programme.
E:22	**Error while locking the door**	Door is closed, but it cannot be locked. Switch off the washing machine. Switch it back on and restart the washing program. If the error reoccurs, call a service technician.

Problem/ error	Indication on the display unit and problem description	What to do?
E:23	**Error while unlocking the door.**	Door is closed, but it cannot be unlocked. Turn off the washing machine, then turn it back on. If the error reoccurs, call a service technician. To open the door, see chapter »INTERRUPTIONS AND CHANGING THE PROGRAMME/Opening the door manually«.
E:36	**Electronics communication failure in the washing machine**	Unplug the power cord from the outlet; then, plug the power cord back into the outlet and switch on the washing machine. If the error reoccurs, call a service technician.
E:37	**Electronics communication failure in the washing machine**	Unplug the power cord from the outlet; then, plug the power cord back into the outlet and switch on the washing machine. If the error reoccurs, call a service technician.
E:40	**Warning from the system for detecting extended washing machine voltage fluctuation – 180 V > U > 260 V**	A prolonged drop of voltage do below 180 V, or voltage in excess of 260 V was detected, which can affect the washing machine operation. Check the power supply network to which your washing machine is connected.
E:41	**Warning from the system for detecting incorrect power mains frequency (50/60 Hz)**	When the washing machine was switched on, the system detected incorrect supply power frequency, which could affect washing machine functionality. Any problems on the power network should be checked and corrected.

Warnings/information for the user, which can be indicated on the display unit, may include the following:

Warning/ information	Indication on the display unit	Error cause and description, what to do?
AC	**ANTI CREASE function that you have selected as a part of the washing programme is activated and in progress.**	To stop the **ANTI CREASE** function, press the (1) ON/OFF button.
CLF	**Water drain system alert** Display of warning CLF.	Alert about reduced water flow in the pumping stage. Check the following: • is the pump filter clean, • is the discharge hose clogged, • is the drain clogged, • if the discharge hose placed is placed below the maximum and above the minimum height (see chapter »INSTALLATION AND CONNECTION/Connecting and securing the water discharge hose«).

Warning/ information	Indication on the display unit	Error cause and description, what to do?
Cln	**System warning to run the Drum clean (Self-cleaning programme)** After the washing programme is complete, the signs Cln and End will alternate on the display unit.	When a warning appears on the display after washing, do the following: • clean the dispenser tray, • clean the water supply hose, detergent dispenser housing, and rubber door gasket, • clean the pump filter (see the »MAINTENANCE & CLEANING« chapter); and then use the Drum clean (Self-cleaning programme) (see chapter »WASHING PROCESS, STEP BY STEP (1-6)/Step 3: Programme table«).
Fd	**Warning by the system for detecting excessive foaming during the washing programme.**	In case of excessive foaming in the washing machine or leak of foam through the detergent dispenser tray, the washed laundry has to be rinsed thoroughly with a large amount of water. Choose a washing programme, but do not add any detergent. • We recommend choosing the Rinse & Softening programme. • Decrease the amount of detergent added.
PF	**Power supply failure warning (»PF«/Power Failure)**	The system detected a power supply failure during the washing programme progress, which affected functional execution of the washing programme. Check the power supply network to which your washing machine is connected.
U:Lo	**Warning – U:Lo (voltage below 180 V)**	A prolonged drop of voltage to below 180 V was detected, which can affect the washing machine operation. Check the power supply network to which your washing machine is connected.
	Unresponsive display unit and all buttons	Unplug the power cord from the outlet. Check if the supply voltage is suitable for the washing machine (220–240 V); then, plug the power cord back into the outlet and switch on the washing machine.
U:Hi	**Warning – U:Hi (voltage over 260 V)**	A prolonged voltage surge to over 260 V was detected, which can affect the washing machine operation. Check the power supply network to which your washing machine is connected.

Warning/ information	Indication on the display unit	Error cause and description, what to do?
	Washing machine standing by, ready to resume the washing programme The time remaining until programme completion is alternately lit and off on the display unit.	To resume the washing programme, press the (3) button **START**/PAUSE.
	Preparation for unlocking the door Signal lights will flash on the display unit.	Wait until the process is completed. If no error is indicated after the process, then a new programme can be started. Water has to be drained. Wait for the door to unlock.

Noise and vibration - Make sure the appliance is levelled using the adjustable legs and that the jam nuts are securely tightened.

Unevenly distributed laundry or lumps of laundry in the washing machine drum can cause problems such as vibration and noisy operation. The washing machine detects such problems and the UKS* (*stability control system) will be activated.
Smaller loads (e.g. one towel, one sweater, one bathrobe etc.) or clothes made of materials with special geometrical properties are virtually impossible to distribute evenly across the washing machine drum (slippers, large items etc.). This results in several attempts to redistribute the laundry, which in turn leads to longer programme duration. In extreme cases of unfavourable conditions, the programme can be completed without the spinning cycle.
The UKS* (*stability control system) allows stable operation and a longer washing machine useful life.

If the problems persist despite observing the advice above, call an authorized service technician.

SERVICING

Before calling a service technician

When you contact a service centre, please state your washing machine's type (1), code/ID (2), model number (3), and serial number (4).

Washing machine type, code, model, and serial number can be found on the rating (type) plate on the inner side of the washing machine door.

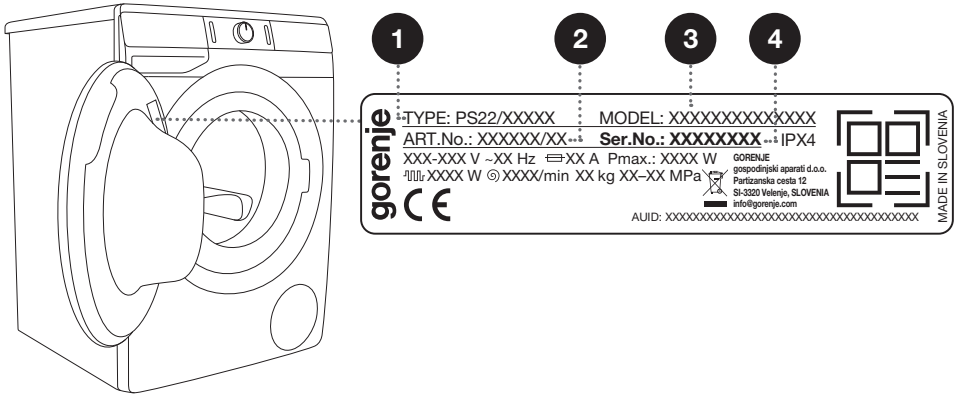

⚠ In case of a defect, only use approved spare parts by authorized manufacturers.

⚠ Repair or any warranty claim resulting from incorrect connection or use of the washing machine shall not be covered by the warranty. In such cases, the costs of repair shall be charged to the user.

The warranty does not cover consumables, minor deviations in colour, increased noise that results from appliance age and which does not affect the functionality of the appliance, and aesthetic defects on components, which do not affect the functionality and safety of the appliance.

The warranty does not cover the errors or failures resulting from disturbances from the environment (lightning strike, power grid failures, natural disasters etc.).

Additional equipment and accessories for maintenance can be viewed on our website at: www.gorenje.com

Please report any malfunction to the call centre at tel. no. +386(03) 899 7000 or at the web address www.gorenje.com. The contact information of your authorised service centres can also be found in the attached warranty card and on the website by scanning the QR code located on the rating plate (see the »WASHING MACHINE DESCRIPTION/Technical specifications« chapter).

Some simple errors and faults can be properly rectified by the user without causing any safety problem, provided that the fault is rectified within the prescribed limits. See the »TROUBLESHOOTING/Troubleshooting error table« chapter. Unless otherwise stated in the Troubleshooting error table, repair must be carried out by authorised professional repairers.

The spare parts for the washing machine you have purchased are available for 10 years. During this time, original spare parts will be available to ensure the proper functioning of your appliance. The list of spare parts is available on the following website: **https://partners.gorenje.com/GSD/gsd_public.aspx?**

RECOMMENDATIONS FOR WASHING AND ECONOMIC USE YOUR WASHING MACHINE

Wash new coloured garments separately the first time.

Wash heavily soiled laundry in smaller amounts, with more powder detergent or with a pre-wash cycle.

Apply a special stain remover on stubborn stains before the wash.

With slightly soiled laundry, we recommend a programme without a pre-wash cycle, use of shorter programmes (e.g. **FAST**) and a lower washing temperature.

If you often wash laundry at low temperatures and with liquid detergents, bacteria may spawn which can cause odour in the washing machine. To prevent such odour, we recommend occasionally running the Drum clean (Self-cleaning programme) (see PROGRAMME TABLE).

We recommend avoiding washing very small amounts of laundry as this will lead to excessive use of energy and poorer washing machine performance.
Loading the washing machine up to the capacity indicated by the manufacturer for the respective programmes will contribute to energy and water savings and improve the performance of the washing machine.

The following information is accessible via the QR AUID code located on the rating plate (see chapter »WASHING MACHINE DESCRIPTION/Technical specifications«):

- rated capacity in kg;
- programme duration, expressed in hours and minutes;
- energy consumption, expressed in kWh/cycle;
- water consumption;
- maximum temperature reached inside the laundry;
- remaining moisture content after the washing cycle.

Loosen any folded laundry before putting it into the drum.
Only use detergents for machine washing.

If water hardness exceeds 14°dH, water softener should be used. Heater damage resulting from incorrect use of water softeners shall not be covered by the warranty. Check the information on water hardness with your local water supply company or authority.

Use of chlorine-based bleaches is not recommended as they can damage the heater.

Do not add hardened lumps of powder detergent into the detergent dispenser as this may clog the piping in the washing machine.

When using thick liquid laundry care products, we recommend diluting them with water to prevent clogging the dispenser tray drain.
Liquid detergents are intended for washing programmes without a prewash cycle.

At higher spinning rates, there will be less residual moisture in the laundry. As a result, drying in a tumble dryer will be more economical and faster.

Water hardness	Hardness levels			
	°dH (°N)	m mol/l	°fH (°F)	p.p.m.
1 – soft	< 8,4	< 1,5	< 15	< 150
2 – normal	8,4–14	1,5–2,5	15–25	150–250
3 – hard	> 14	> 2,5	> 25	> 250

Check the information on water hardness with your local water supply company or authority.

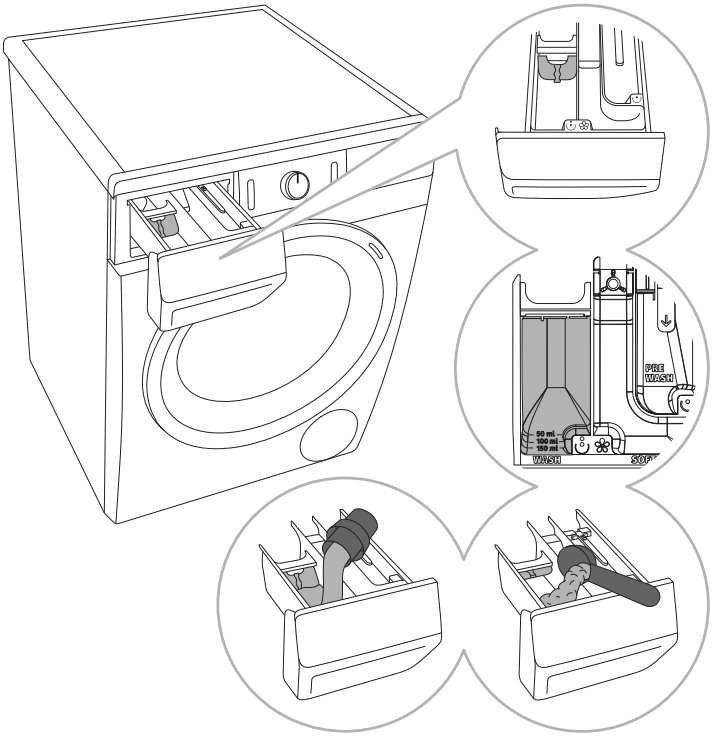

1 A separator/divider tab is supplied with the washing machine, which allows adding liquid detergent to the main wash compartment (left compartment).

2 Powder and liquid detergent level indicator.

3 When using powder detergent, the separator/divider tab should be lifted.

4 When using liquid detergent, the separator/divider tab should be lowered.

Symbols of detergent dispenser compartments	
	prewash
	main wash
	softening

We recommend adding powder detergent immediately before the washing cycle. If you add it sooner, make sure the detergent compartment in the dispenser tray is completely dry before adding the powder detergent: otherwise, the powder detergent may cake before the start of the washing process.

Pour the conditioner into the dispenser tray, into the compartment with the symbol . Observe the recommendation on the conditioner packaging.

Do not fill the conditioner compartment over the max. indication (maximum indicated level). Otherwise, the conditioner will be added to the laundry too soon, leading to poorer washing effect.

CONSUMPTION VALUES

Indicative information is provided in acordance with the EU Regulation 2019/2023. The values given for programs other than Eco 40-60 were determined in accordance with the applicable standard EN60456.

	Programme	Capacity (kg)	Programme duration (h:min)[1]	Energy consumption (kWh/cycle)[1]	Water consumption (l/cycle)[1]	Maximum Temperature (°C) 5 mins[1]	Spin speed (rpm)[1]	Remaining moisture content (%)[1]
i	**Eco 40-60[2]**	7	03:05	0,82	52	39	1400	53
i	**Eco 40-60[2]**	3,5	02:33	0,33	43	28	1400	53
i	**Eco 40-60[2]**	2	02:31	0,25	35	27	1400	53
ii	**Cotton colour 20°C**	7	02:29	0,24	66	20	1200	55
iii	**Cotton white 60°C**	7	02:52	1,45	66	60	1200	55
iv	**Mix 40°C**	3,5	01:52	0,57	60	40	1000	40
v	**Speed 20´**	2,5	00:20	0,05	32	28	1000	55
vi	**Cotton white 60°C + water plus**	7	02:52	2,10	70	60	1200	55

i The Eco 40-60 programme at the rated capacity, half of the rated capacity and a quarter of the rated capacity
ii The 20°C programme at the rated capacity for this programme
iii One cotton programme at nominal temperature higher than or equal to 60°C at the rated capacity for this programme
iv One programme for other textiles than cotton or a mix of textiles at the rated capacity for this programme
v One programme for the quick washing of lightly soiled laundry at the rated capacity for this programme
vi One programme for heavily soiled textiles at the rated capacity for this programme

[1] Due to the influance of water pressure, hardness and inlet temperature, type, amount and soiling of laundry, detergent used, power supply and selected functions the actual values may deviate from the stated values.
[2] Test programme in acordance with the EU Ecodesign directive and the EU Energy Labeling Regulation with cold water (15°C).

PRODUCT INFORMATION

PRODUCT INFORMATION SHEET According to EU-Regulation No. 2019/2014
(depending on the model)

Supplier's name or trade mark:					
Supplier's adress ([b]):					
Model identifier:					
General product parameters:					
Parameter	Value		Parameter	Value	
Rated capacity ([a]) (kg)	x,x		Dimensions in cm	Height	x
				Width	x
				Depth	x
EEI_W ([a])	x,x		Energy efficiency class ([a])	[A/B/C/D/E/F/G] ([c])	
Washing efficiency index ([a])	x,xxx		Rinsing effectiveness (g/kg) ([a])	x,x	
Energy consumption in kWh per cycle, based on the »eco 40-60« programme. Actual energy consumption will depend on how the appliance is used.	x,xxx		Water consumption in litre per cycle, based on the »eco 40-60« programme. Actual water consumption will depend on how the appliance is used and on the hardness of the water.	x	
Maximum temperature inside the treated textile ([a]) (°C)	Rated capacity	x	Remaining moisture content ([a]) (%)	x,x	
	Half	x			
	Quarter	x			
Spin speed ([a]) (rpm)	Rated capacity	x	Spin-drying efficiency class ([a])	[A/B/C/D/E/F/G] ([c])	
	Half	x			
	Quarter	x			
Programme duration ([a]) (h:min)	Rated capacity	x:xx	Type	[built-in/ free standing]	
	Half	x:xx			
	Quarter	x:xx			
Airborne acoustical noise emissions in the spinning phase ([a]) (dB(A) re 1 pW)	x		Airborne acoustical noise emissions class ([a]) (spinning phase)	[A/B/C/D] ([c])	
Off-mode (W)	x,xx		Standby mode (W)	x,xx	
Delay start (W) (if applicable)	x,xx		Networked standby (W) (if applicable)	x,xx	

856532

Minimum duration of the guarantee offered by the supplier ([b]):	
This product has been designed to release silver ions during the washing cycle	[YES/NO]

Additional information:
Weblink to the supplier's website, where the information from point 9 Anex II to Commition Regulation (EU) 2019/2023 ([a]) ([b]) is found:

([a]) for the »eco 40-60« programme.

([b]) changes to these items shall not be considered relevant for the purposes of paragraph 4 of Article 4 of Regulation (EU) 2017/1369.

([c]) if the product database automatically generates the definitive content of this cell the supplier shall not enter these data.

LOW STANDBY MODE

If you do not run any program or choose any settings after switching on the washing machine (**ON**/OFF button (1)), the display unit will be switched off after 5 minutes and switched to stand-by mode in order to save energy.
The display unit will be reactivated if you rotate the programme selector knob (2) or press the ON/OFF button (1). If you do not do anything for 5 minutes after the end of a programme, the display unit will be switched off to save power.

P o = weighted power when off [W]	< 0,5
P l = weighted power when in standby [W]	< 0,5
T l = standby time [min]	5,00

DISPOSAL

Packaging is made of environmentally friendly materials that can be recycled, disposed of, or destroyed without any hazard to the environment. To this end, packaging materials are labelled appropriately.

The symbol on the product or its packaging indicates that the product should not be treated as normal household waste. Take the product to an authorized collection centre for waste electric and electronic equipment processing.

When **disposing** of the washing machine at the end of its useful life, remove all power cords, and destroy the door latch and switch to prevent the door from locking or latching (child safety).

Correct **disposal** of the product will help prevent any negative effects on the environment and health of people, which could occur in case of incorrect product removal. For detailed information on removal and processing of the product, please contact the relevant municipal body in charge of waste management, your waste disposal service, or the store where you bought the product.

We reserve the right to any changes and errors in the instructions for use.

856532