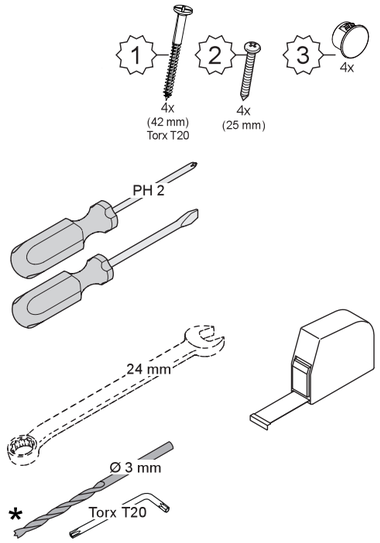
1
2
3
4x
4x
(42 mm)
Torx T20
4x
(25 mm)
PH 2
24 mm
Ø 3 mm
*
Torx T20

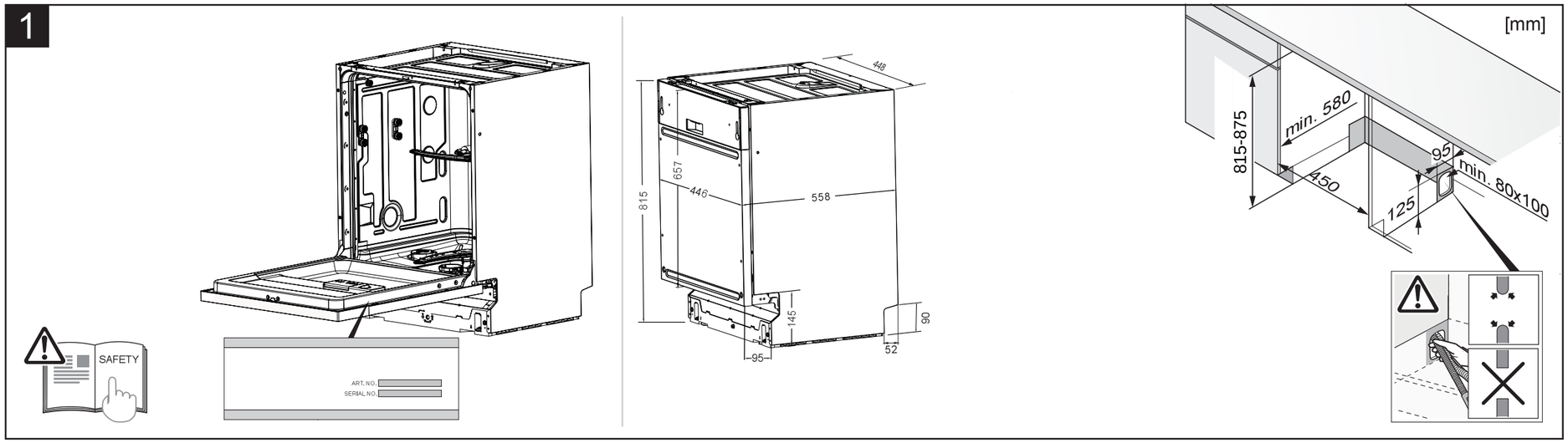
1
SAFETY
ART. NO.
SERIAL NO.
448
657
446
558
815
145
90
95
52
[mm]
815-875
min. 580
450
95
min. 80x100
125

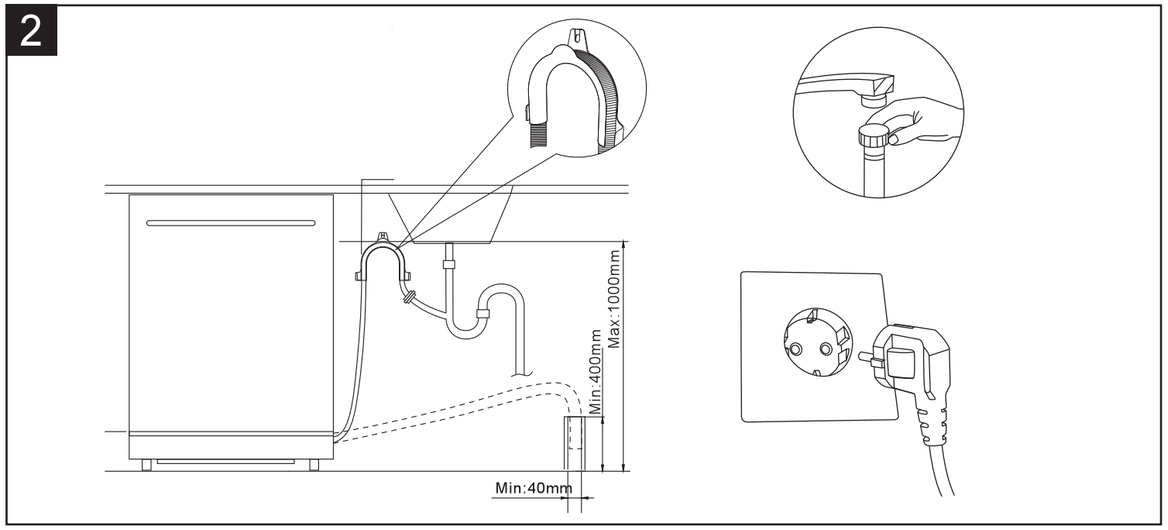
2
Max.1000mm
Min.400mm
Min:40mm

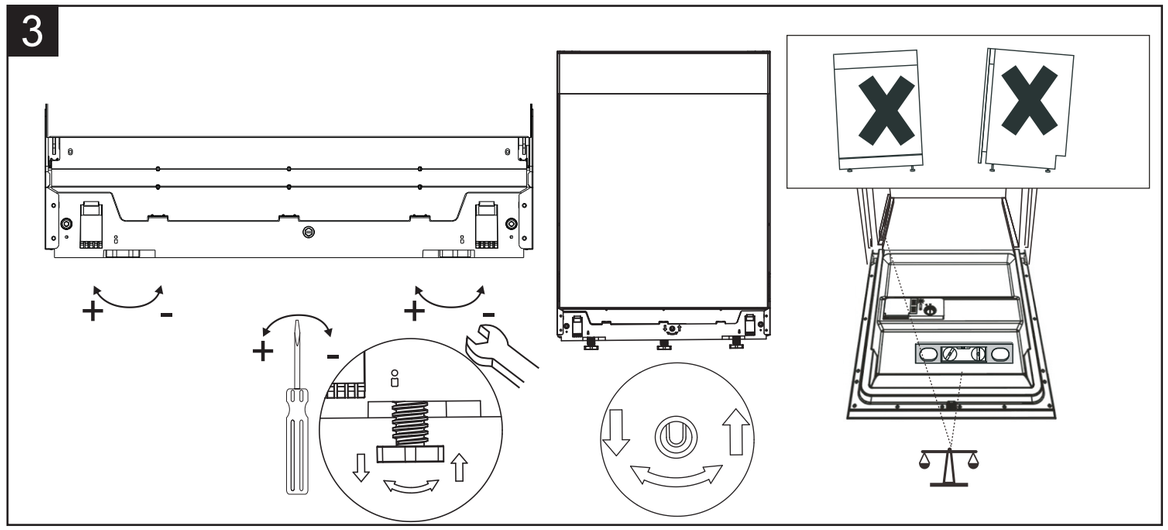
3
+
-
+
-
+
-

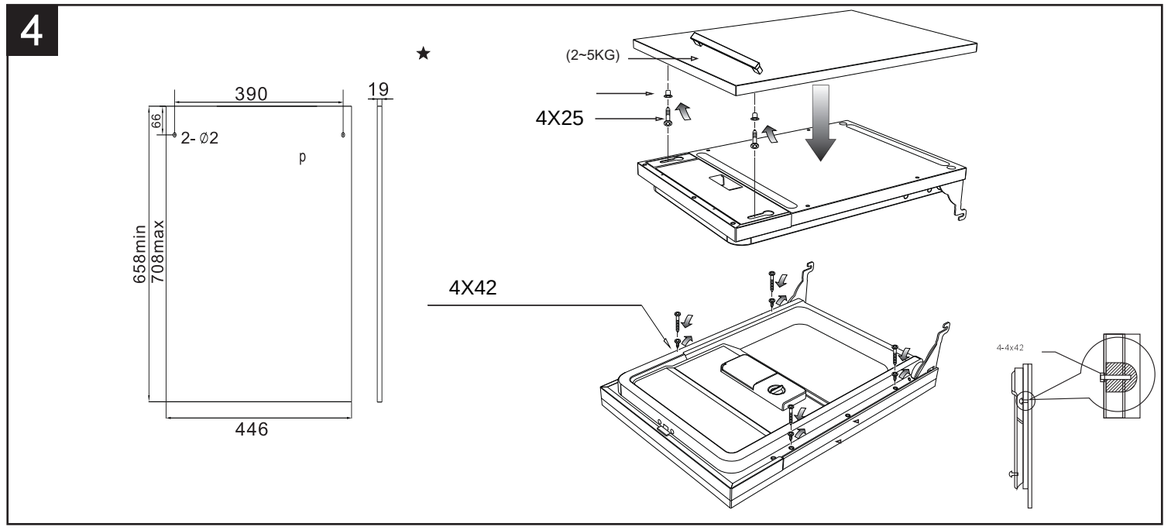
4
★
390
19
66
2- Ø2
658min
708max
446
(2~5KG)
4X25
4X42
4-4x42

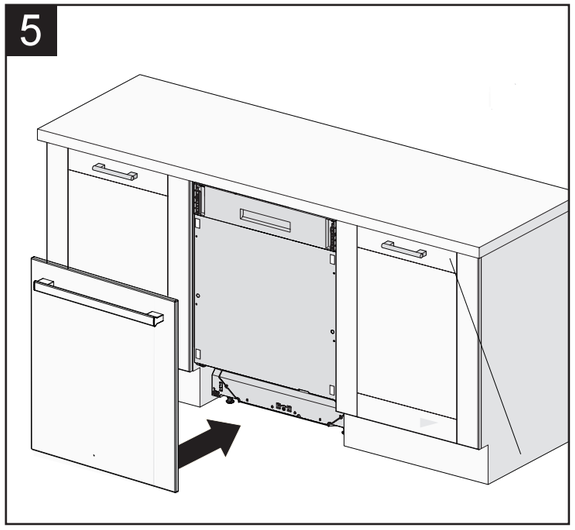
5

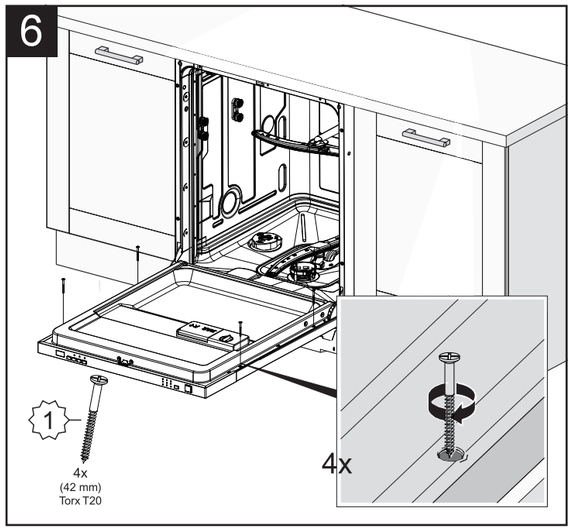
6
1
4x
(42 mm)
Torx T20
4x

## 7

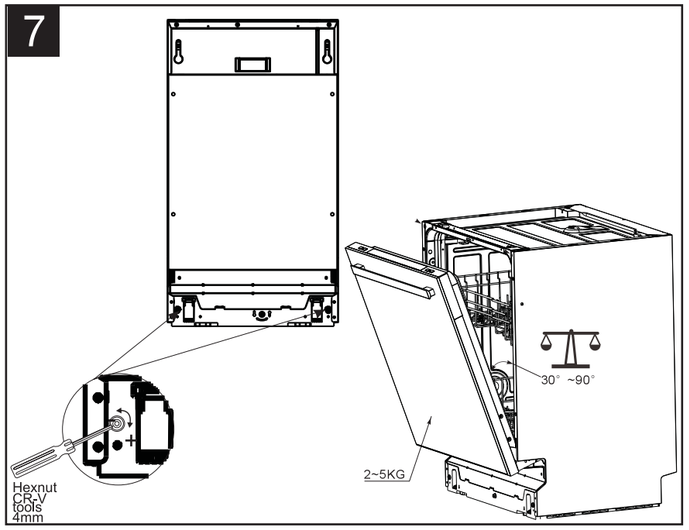


## 8

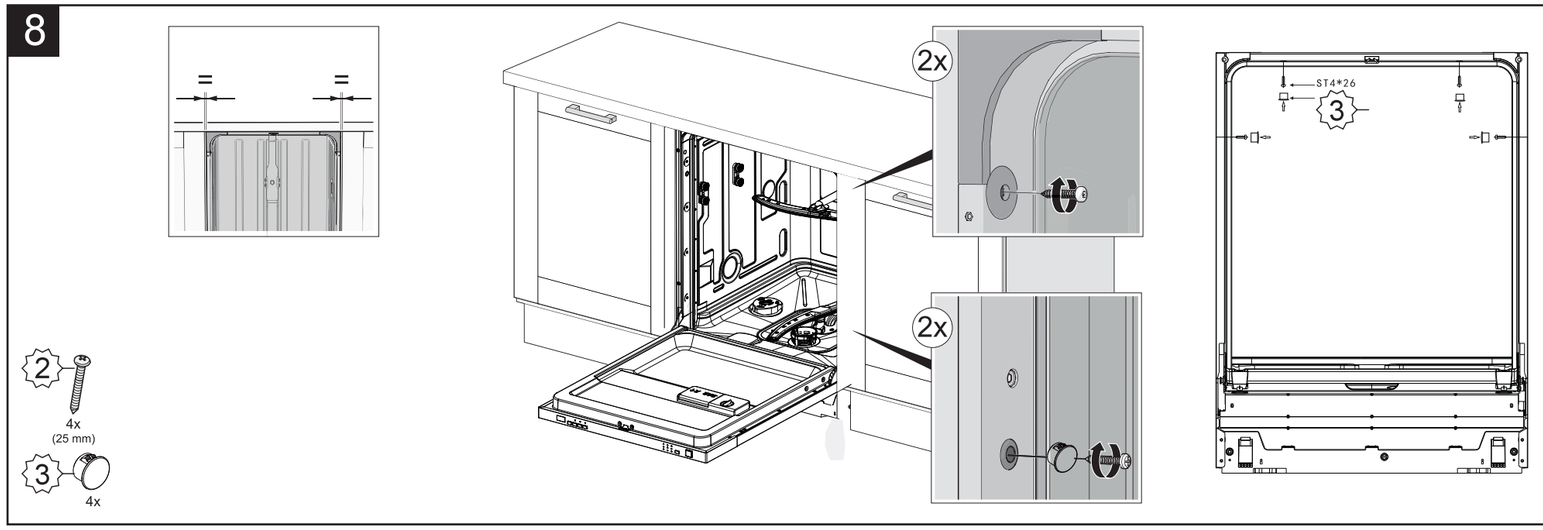


## 9

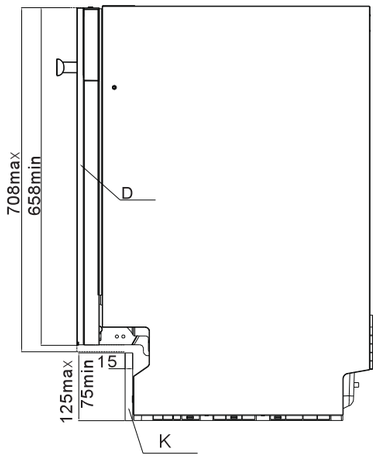


| D | K |
|---|---|
| 708mm | 75mm |
| 698mm | 85mm |
| 688mm | 95mm |
| 678mm | 105mm |
| 668mm | 115mm |
| 658mm | 125mm |