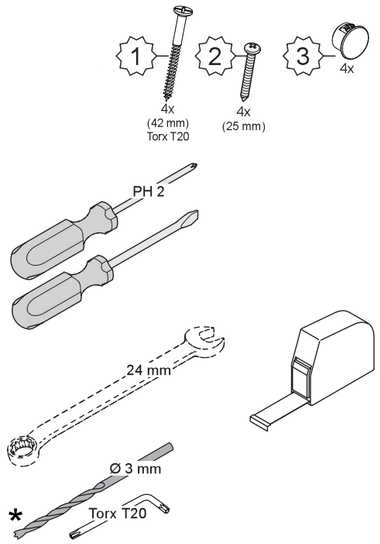
1
2
3
4x
4x
(42 mm)
Torx T20
4x
(25 mm)
PH 2
24 mm
Ø 3 mm
Torx T20
*

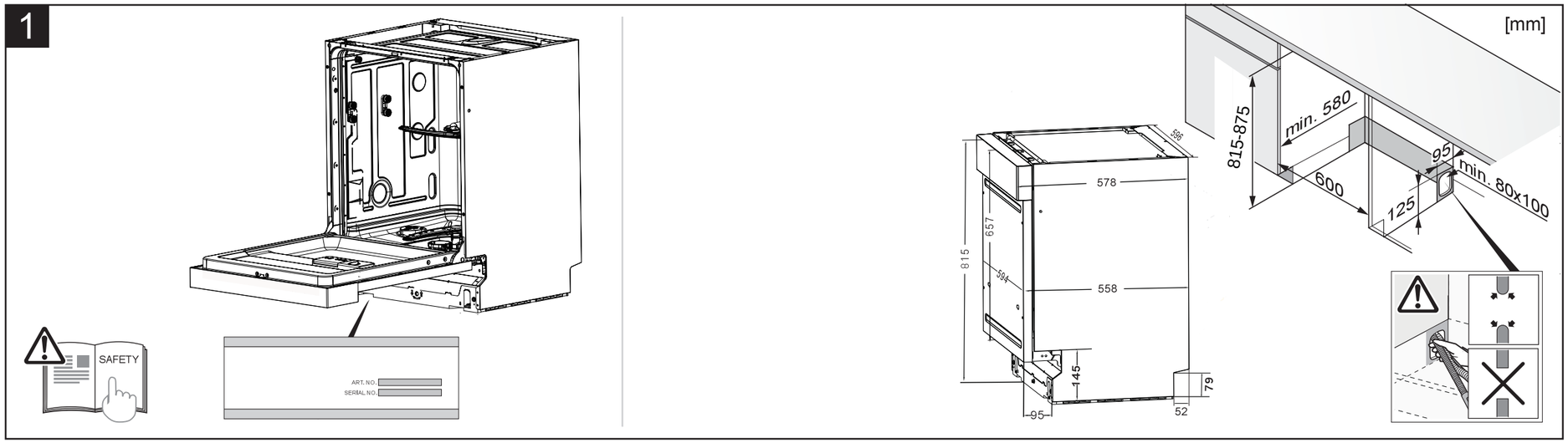
1
SAFETY
ART. NO.
SERIAL NO.
[mm]
815-875
min. 580
600
95
min. 80x100
125
578
558
815
657
594
145
79
95
52

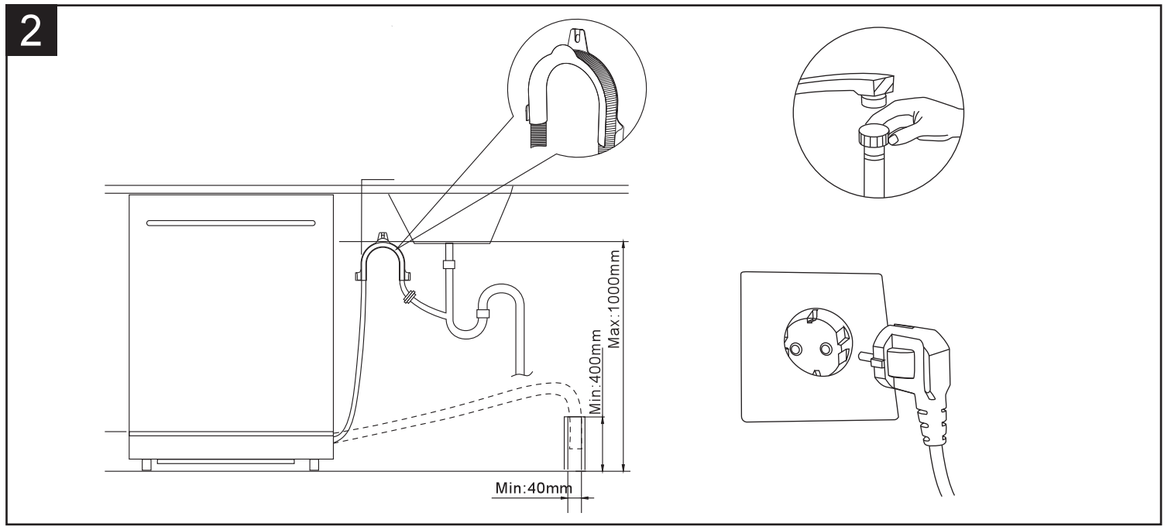
2
Max:1000mm
Min:400mm
Min:40mm

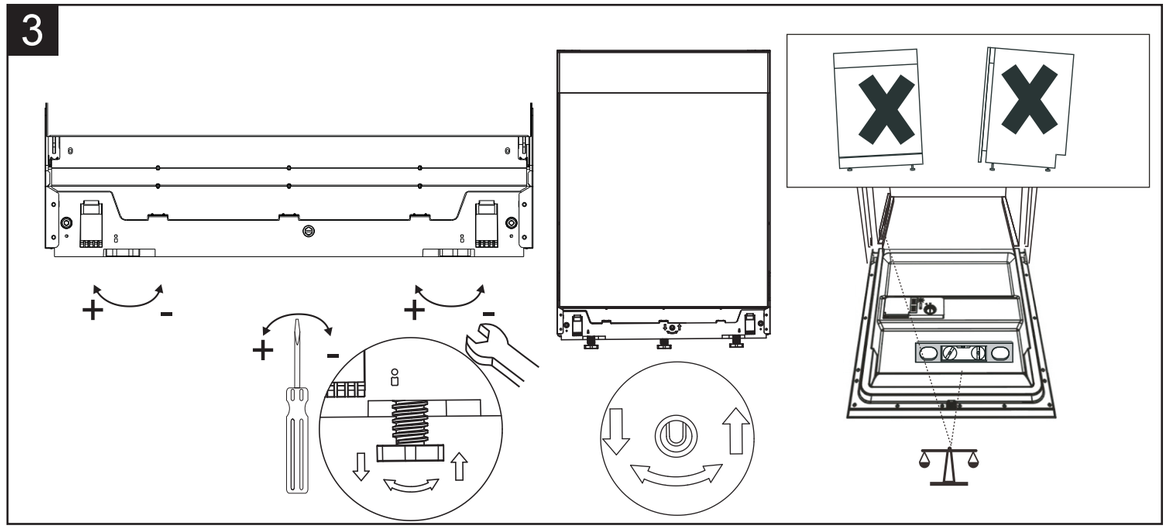
3
+
-
+
-
+
-

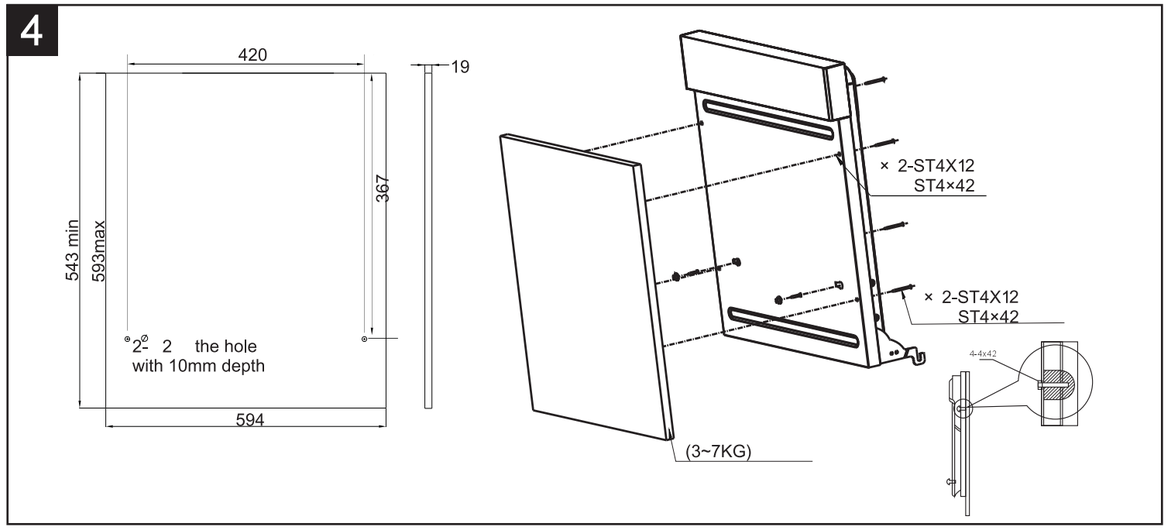
4
420
19
367
543 min
593max
2- 2 the hole
with 10mm depth
594
× 2-ST4X12
ST4×42
× 2-ST4X12
ST4×42
4-4x42
(3~7KG)

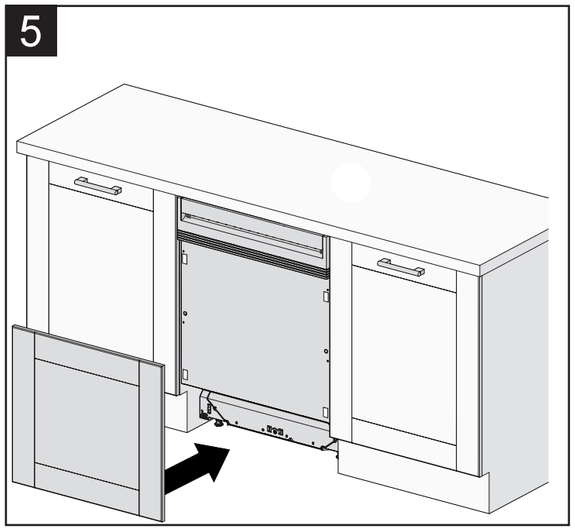
5

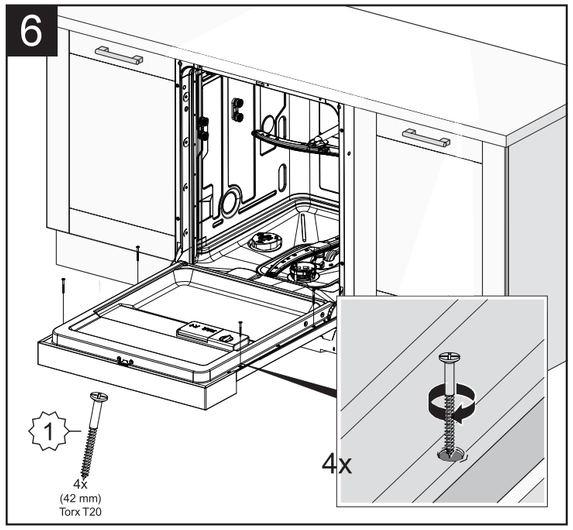
6
1
4x
(42 mm)
Torx T20
4x

7

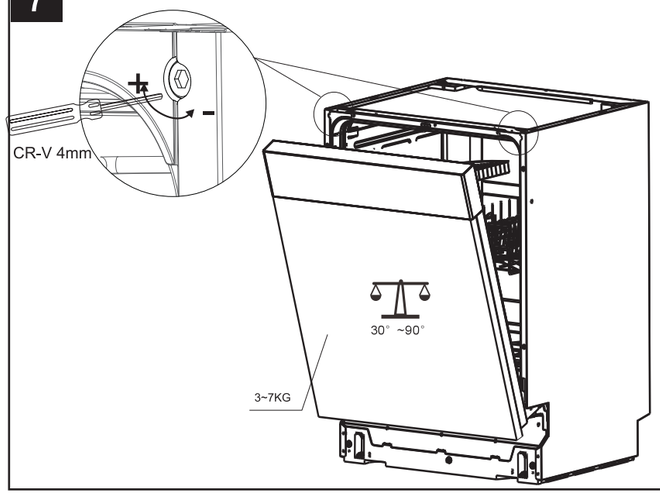

8

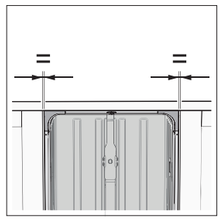

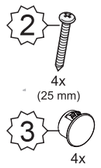

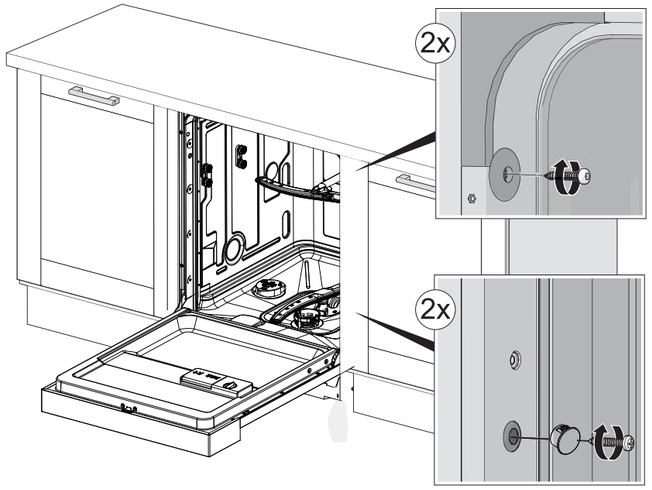

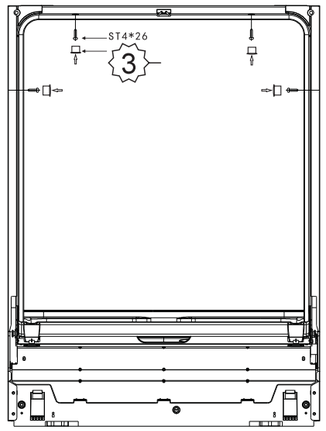

9

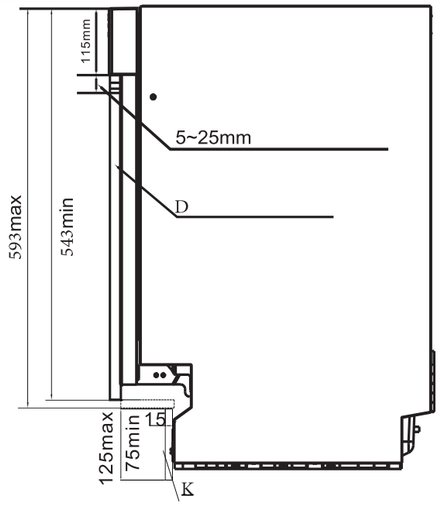

D	K
593mm	75mm
583mm	85mm
573mm	95mm
563mm	105mm
553mm	115mm
543mm	125mm