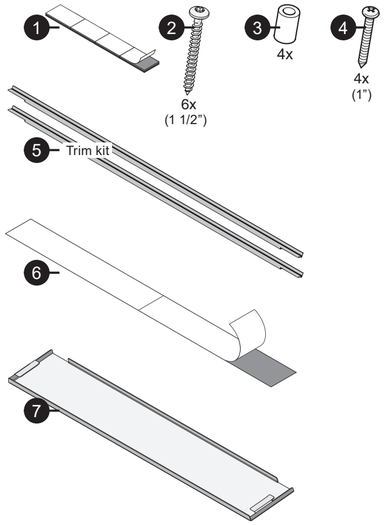

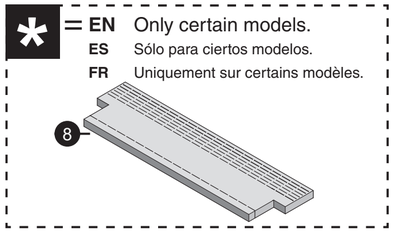

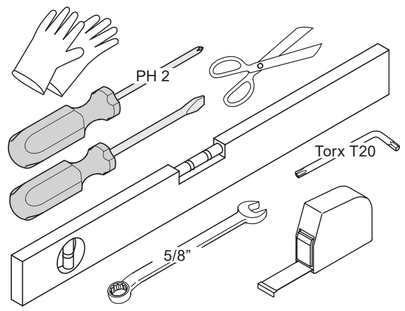

1

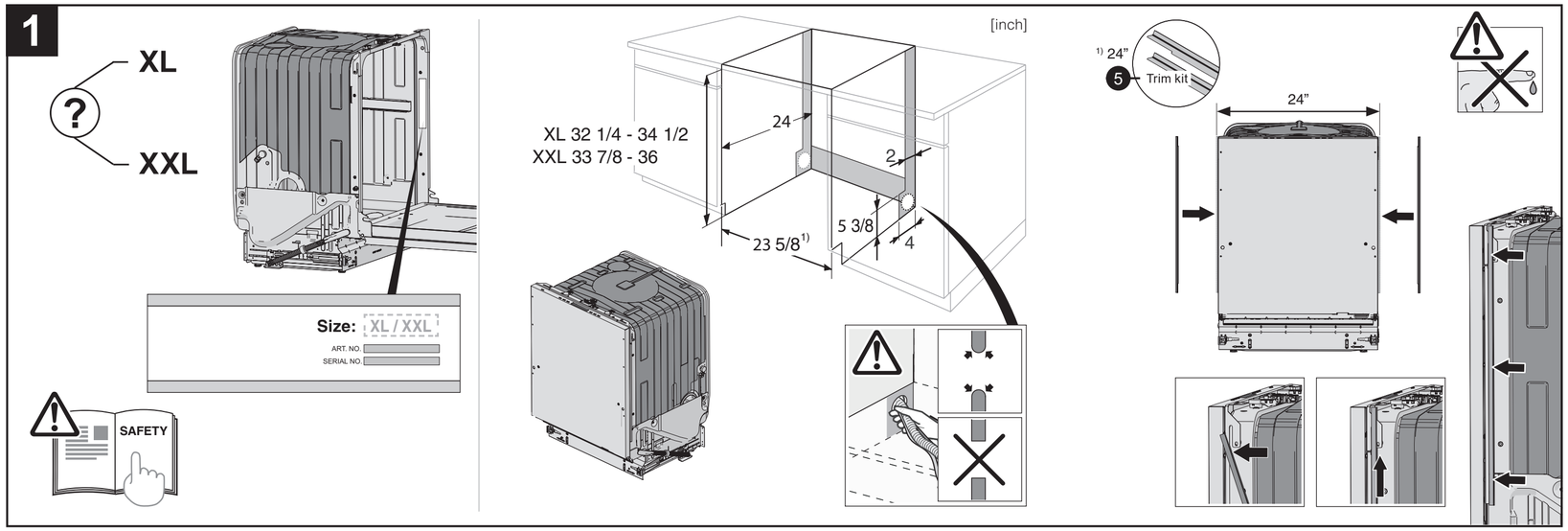

2

3

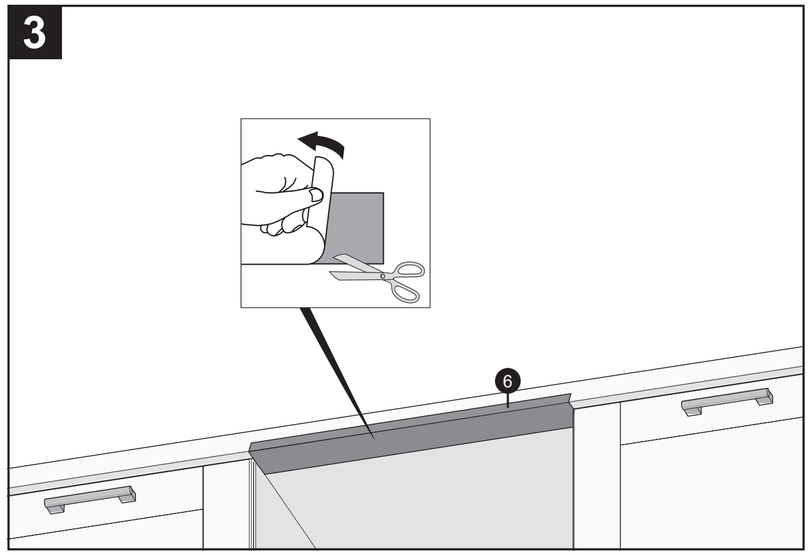

4

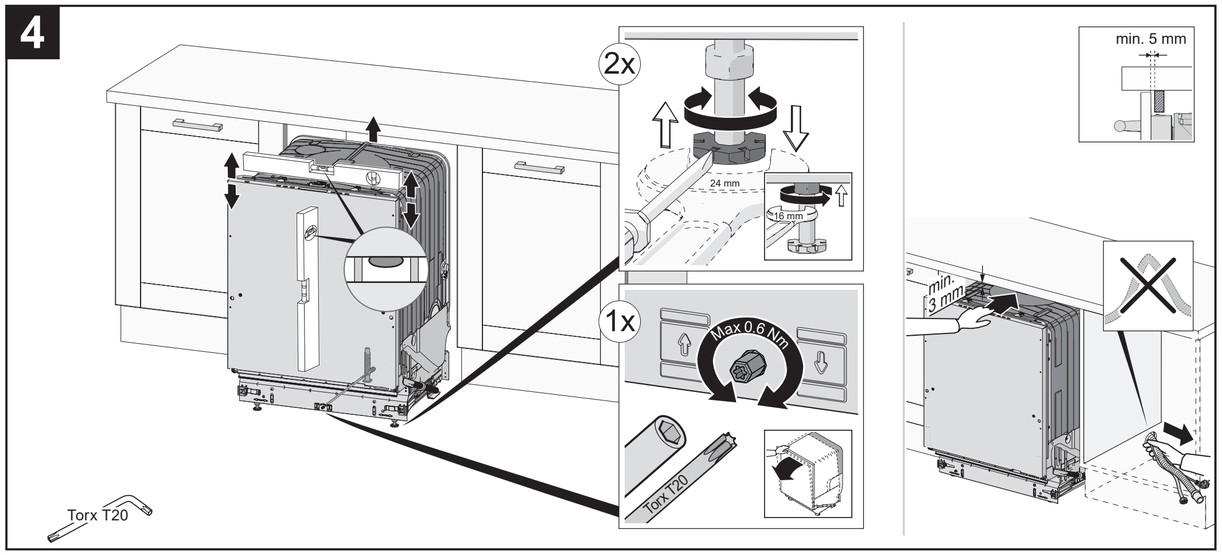

5

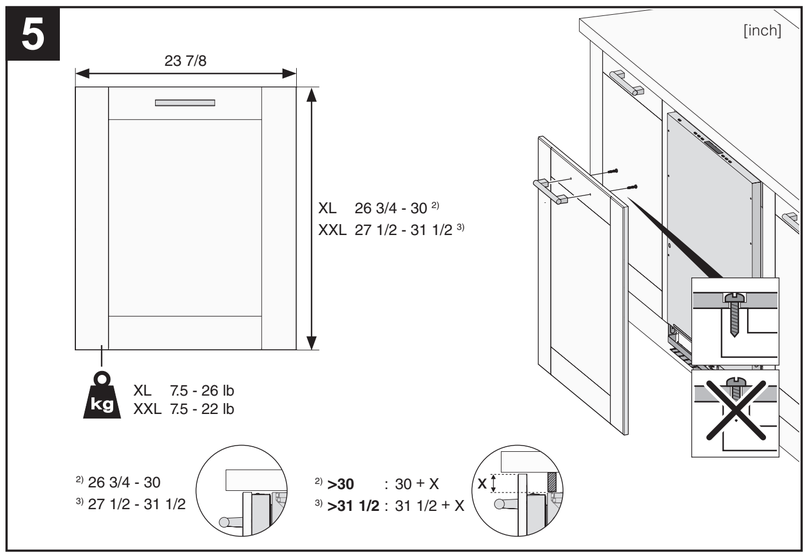

6 *

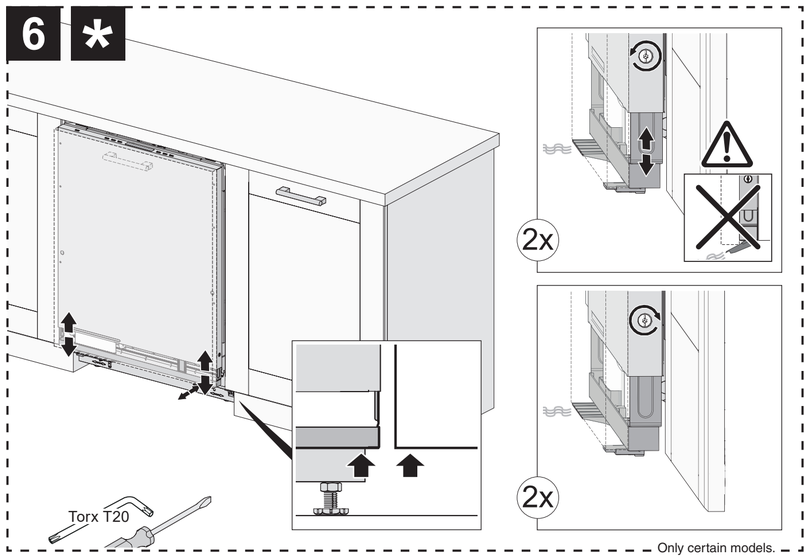

7

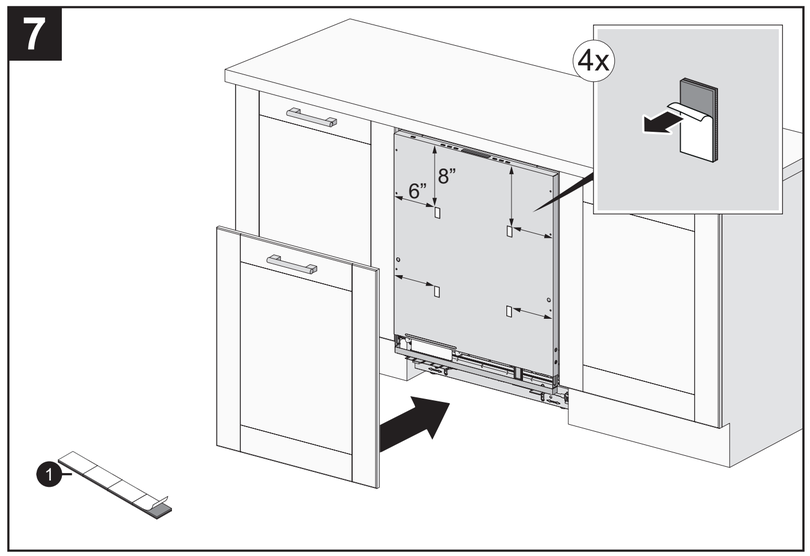

621933-07

Art. No.: 621933. Rev. 07. We reserve the right to make changes.

9

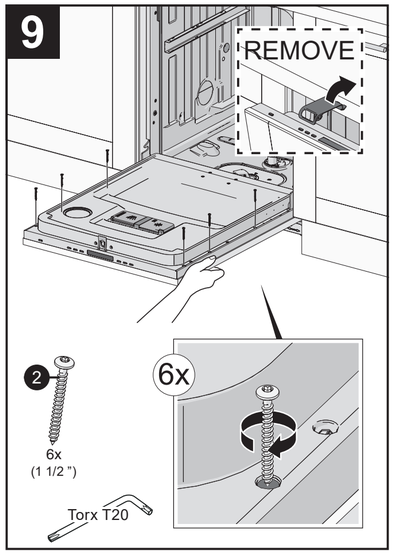

9 *

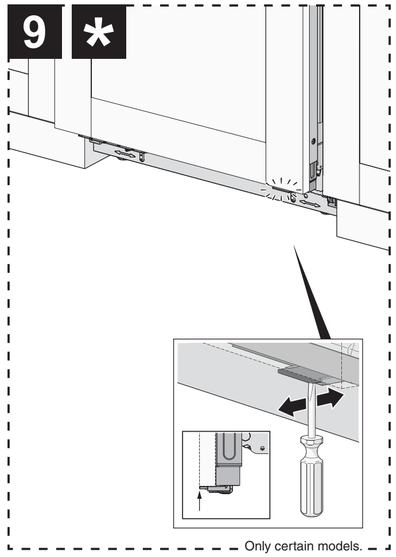

Only certain models.

10

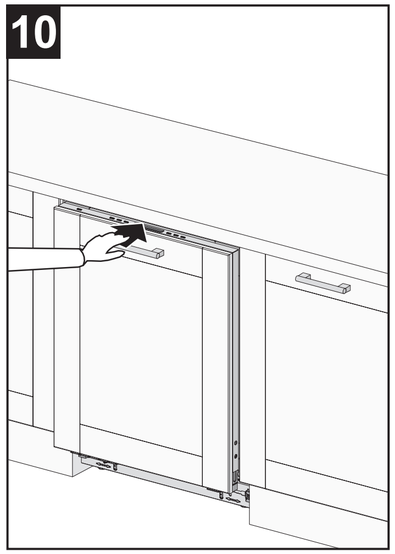

11

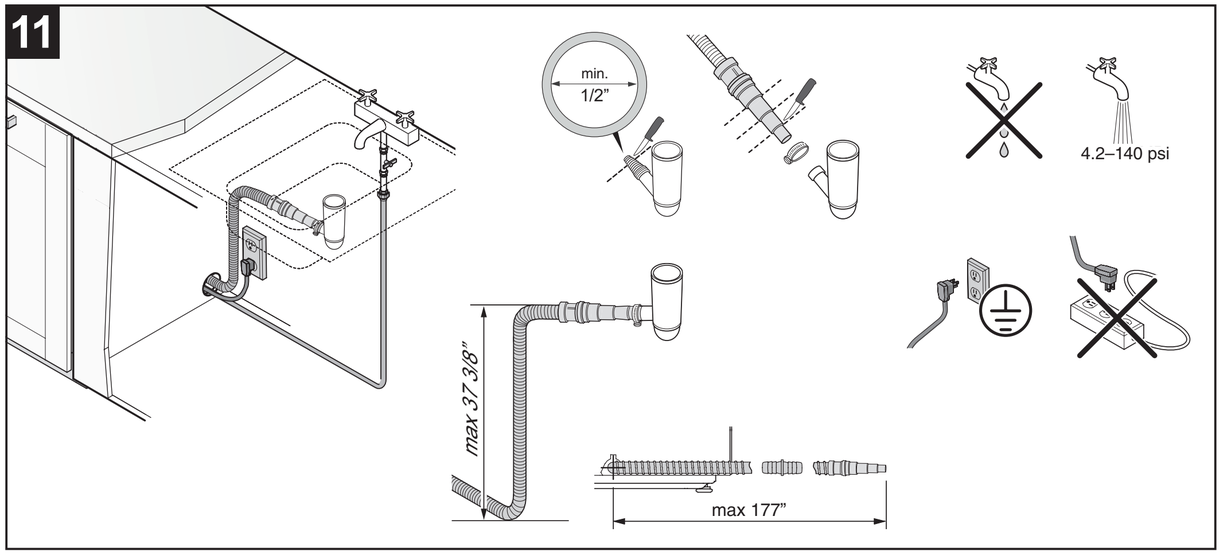

12

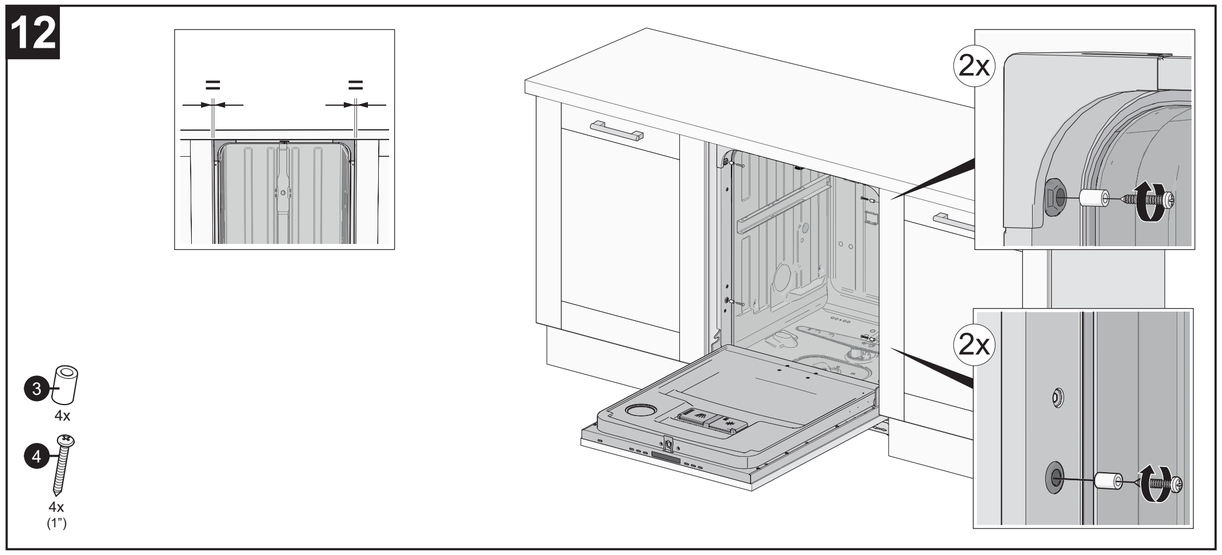

13

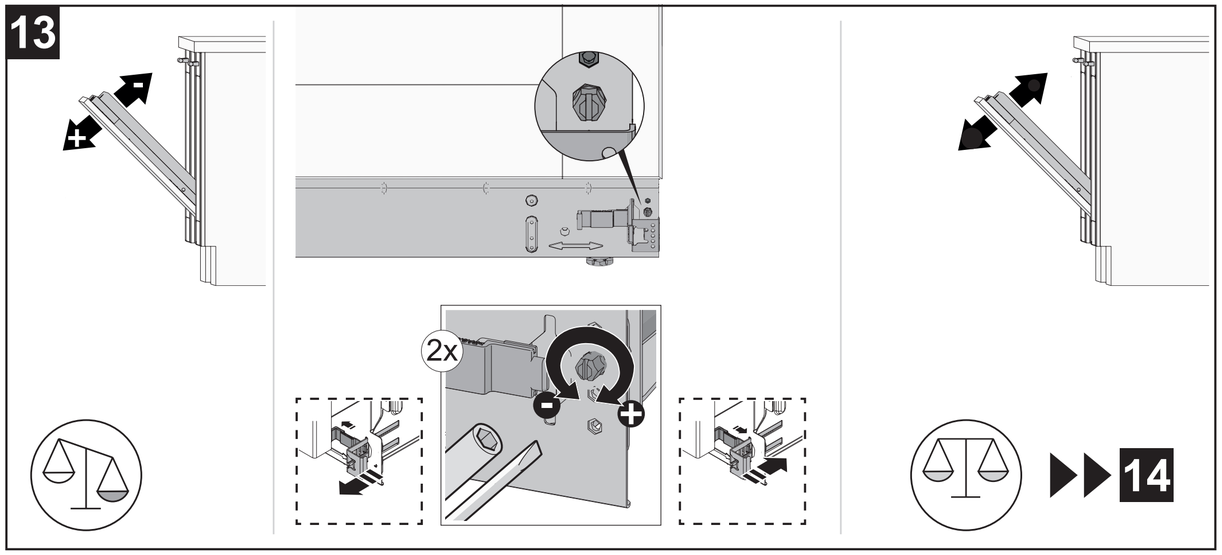

14 *

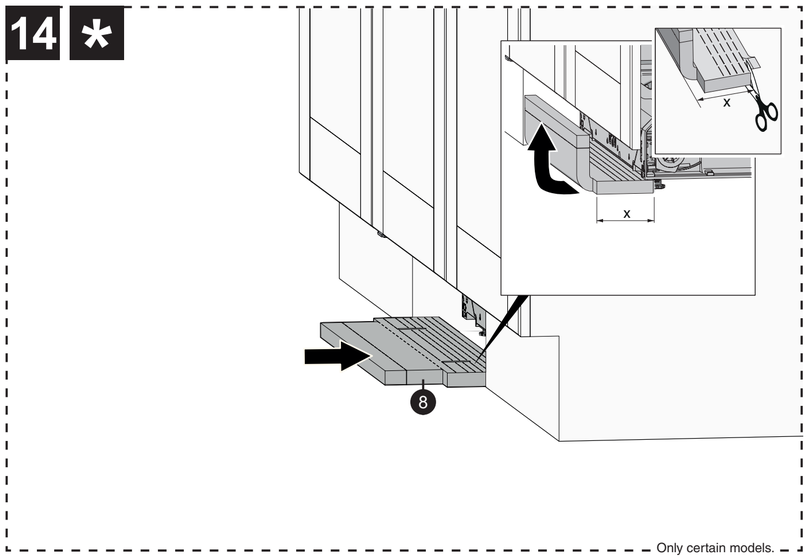

Only certain models.
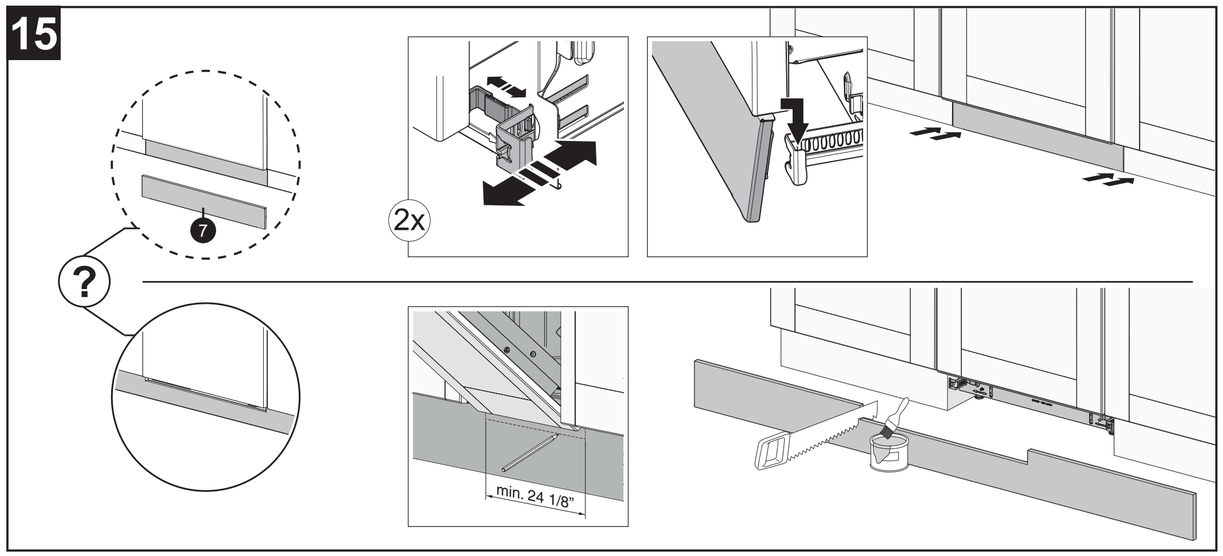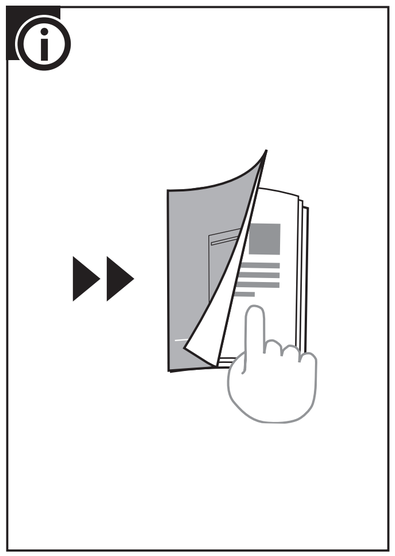
15