ASKO

Swedish quality since 1950

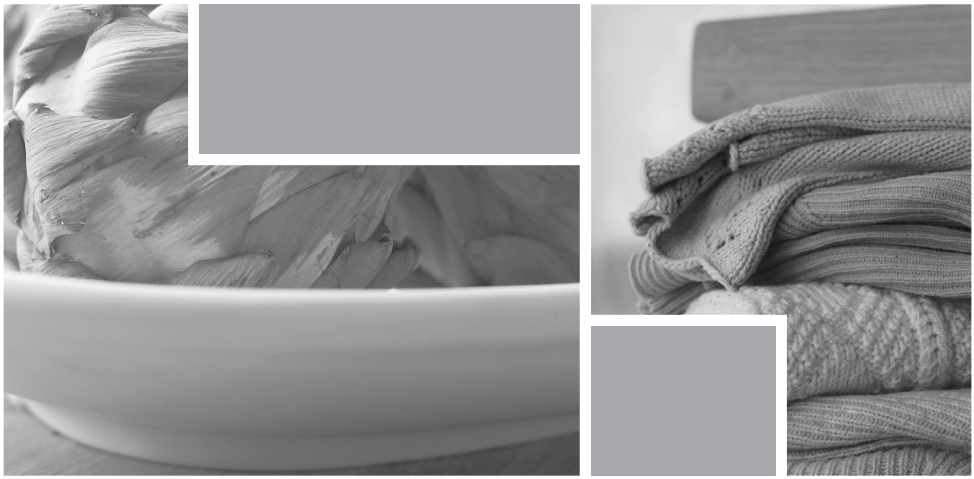

User manual

DRYING CABINET
ASKO DC7794HP

Dear ASKO customer,

Congratulations on making an excellent choice, and welcome to the ASKO family, a global family with its roots in Sweden.

We at ASKO thank you for your trust and hope that you will enjoy using your new drying cabinet.

A good drying cabinet should be well designed, dry clothes well, have a low environmental impact, be user-friendly, save time and energy, have a long service life and be reliable. ASKO offers you all these features.

When you buy an ASKO product, you can be sure that the inside is just as good as the outside and that the ethics and morality that go into building this product are just as high as the quality and function you are getting. That's what Swedish quality is all about.

Before using the product for the first time, please read the user instructions and the advice on caring for the product. This will help you get the best possible results from your product and all its functions.

If you have any questions, do not hesitate to call us or to contact us through our website.

Best wishes from Sweden and the ASKO team.

CONTENTS

THIS USER MANUAL 5

SAFE OPERATION 6

- Use 6
- Technical safety 6

FOR A GOOD ENVIRONMENT 8

- Packaging material 8
- Dealing with an old drying cabinet 8

DESCRIPTION OF THE DRYING CABINET 9

AIR FLOW IN THE CABINET 10

CONTROL PANEL 11

- Display 11
- Language setting 12

POSITIONING THE DRYING CABINET 13

CONDENSATION WATER 14

- Detachable water tank 14
- Connection to floor drain 15
- Reconnection to water tank 15

INSTALLATION 16

- Unpacking 16
- Assembly kit 16
- Reversing the door 17
- Placement/attachment 20
- Electrical connections 21

START-UP 22

OPERATION 23

- User tips 24
- Drying programme 25
- Selecting a drying programme 25
- Starting the drying programme 26
- Stopping the drying programme 27
- The door is opened 27

SETTING THE DRYING PROGRAMME 28

- Introduction 28
- Procedure 29
- Resetting to factory setting 29

CARE 30

- Cleaning 30
- Replacement parts 30
- Service 31

TROUBLESHOOTING 32

FAULT CODE LIST 37

TECHNICAL DATA 38

SERVICE APPENDIX 40

- Electrical diagram 40
- Removing the dehumidifier unit 41

THIS USER MANUAL

The contents of this user manual describe the drying cabinet's functions and how it should be used. It also includes instructions for installation, reversing the door and maintenance.

It also contains a service appendix.

SAFE OPERATION

This advice and the warnings on safe operation have been compiled so that you can avoid incorrect use and unnecessary risks of accidents, and should be read before the drying cabinet is installed and used.

This drying cabinet fulfils the relevant safety requirements. However, incorrect use can lead to personal injury or material damage.

⚠ WARNING!

WARNING - This appliance is intended only for drying textiles washed in water.

Use

- This appliance can be used by children aged from 8 years and above and persons with reduced physical, sensory or mental capabilities or lack of experience and knowledge if they have been given supervision or instruction concerning use of the appliance in a safe way and understand the hazards involved.
- Children shall not play with the appliance. Keep an eye on children when they are in close surroundings of the appliance
- Cleaning and user maintenance shall not be made by children without supervision.

Technical safety

- Check that the drying cabinet has not suffered any visible damage before installing it. A damaged drying cabinet must not be used as it may constitute a danger.
- The drying cabinet may only be connected to an earthed socket that has been installed in accordance with current safety regulations. After installation, the wall socket must be accessible so that the power to the drying cabinet can be turned off at any time.

SAFE OPERATION

- Check that the information on the drying cabinet rating plate (fuse, voltage and frequency) is consistent with the mains electricity supply.
- Do not use an extension lead to set up the electrical connection for the drying cabinet, because the necessary safety cannot be guaranteed (risk of overheating).
- If the power cord is damaged, it must be replaced immediately and then only by the manufacturer, its service agent or similarly qualified persons in order to avoid danger.

FOR A GOOD ENVIRONMENT

Packaging material

The packaging material that protects the drying cabinet against transport damage has been selected with consideration of the environment and is, therefore, recyclable. Packaging material that is returned to the eco-cycle involves less raw material consumption and reduced waste.

Dealing with an old drying cabinet

Once the drying cabinet reaches the end of its life, it must be disposed of for recycling.

Many parts can be reused, but the cabinet also contains material that needs to be handled correctly.

Therefore, never leave the drying cabinet or parts of it with household waste, as this may lead to health risks and damage to the environment.

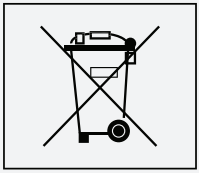

Instead take the old drying cabinet to a recycling station. If necessary, speak to your retailer.

All the plastic parts in the drying cabinet are marked with international standard symbols.

That means that these parts can be environmentally recycled if they are sorted correctly.

DESCRIPTION OF THE DRYING CABINET

The ASKO DC7794HP drying cabinet works according to the same principle as a heat pump, with a dehumidifier unit instead of a conventional hot-air unit. As a result, the washing is dried at lower heat and with substantially lower energy consumption.

The cabinet is a fully enclosed system. No exhaust air connection is required. The moisture condenses during the process, and the water that is formed is conveyed to a detachable water tank, or via a hose to the drain.

In addition, the fan is so powerful that it causes the garments to flutter, which makes the drying process even more efficient.

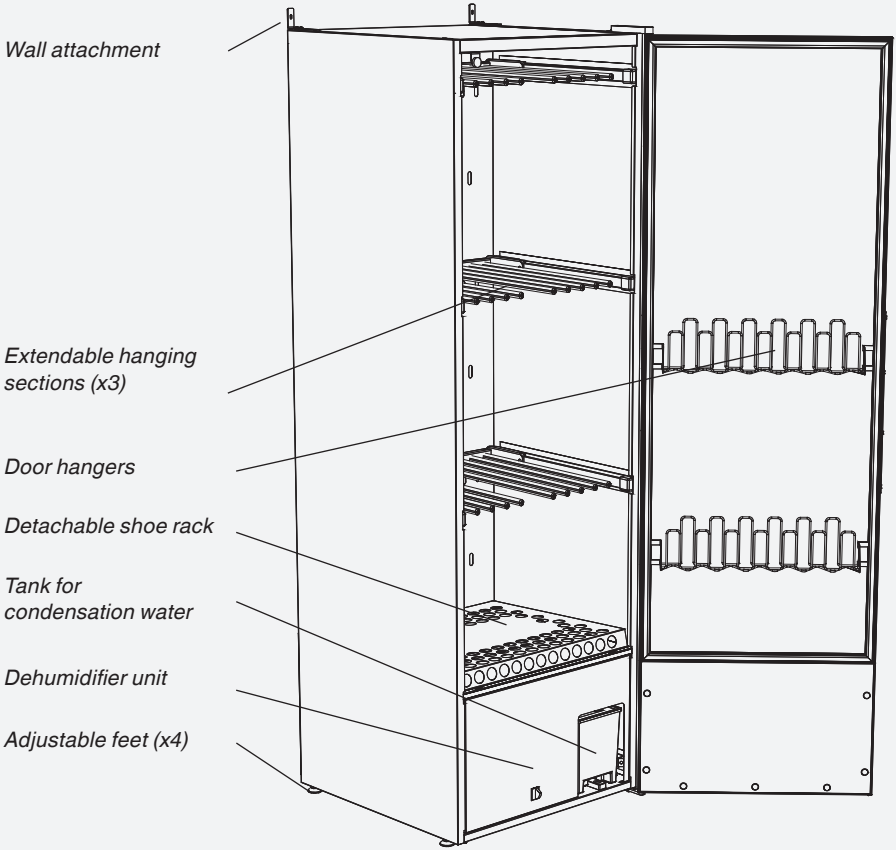

AIR FLOW IN THE CABINET

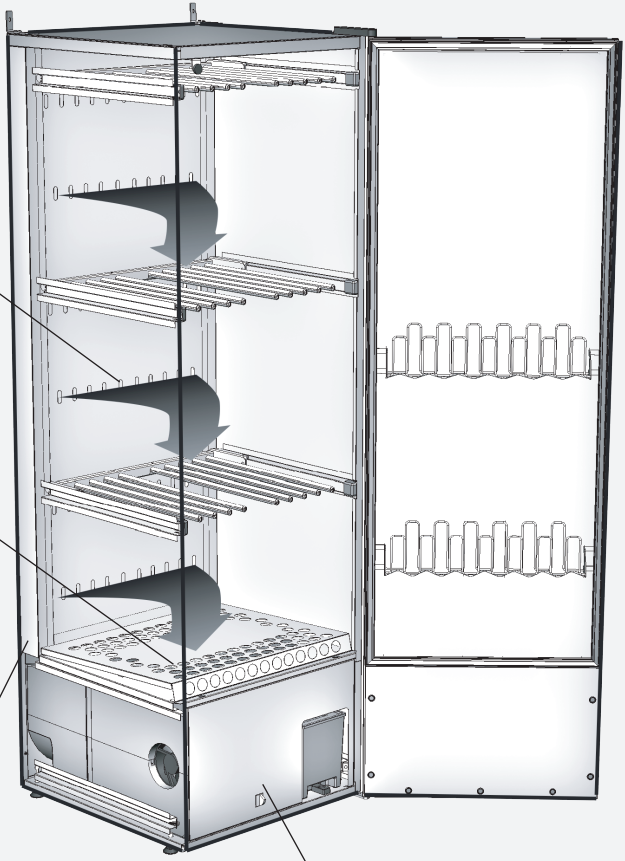

Air inflow in 6 rows of holes

Cleaning filter beneath the shoe rack

Return air after dehumidification. Goes into a duct on the back of the drying cabinet.

Dehumidifier unit

⚠ NB!

Make sure that shoes and similar items placed in the cabinet do not block the air flow!

CONTROL PANEL

The drying cabinet is equipped with two drying programmes for different types of garments. These programmes are set through programming menus using four buttons on the menu panel. Several languages can be used.

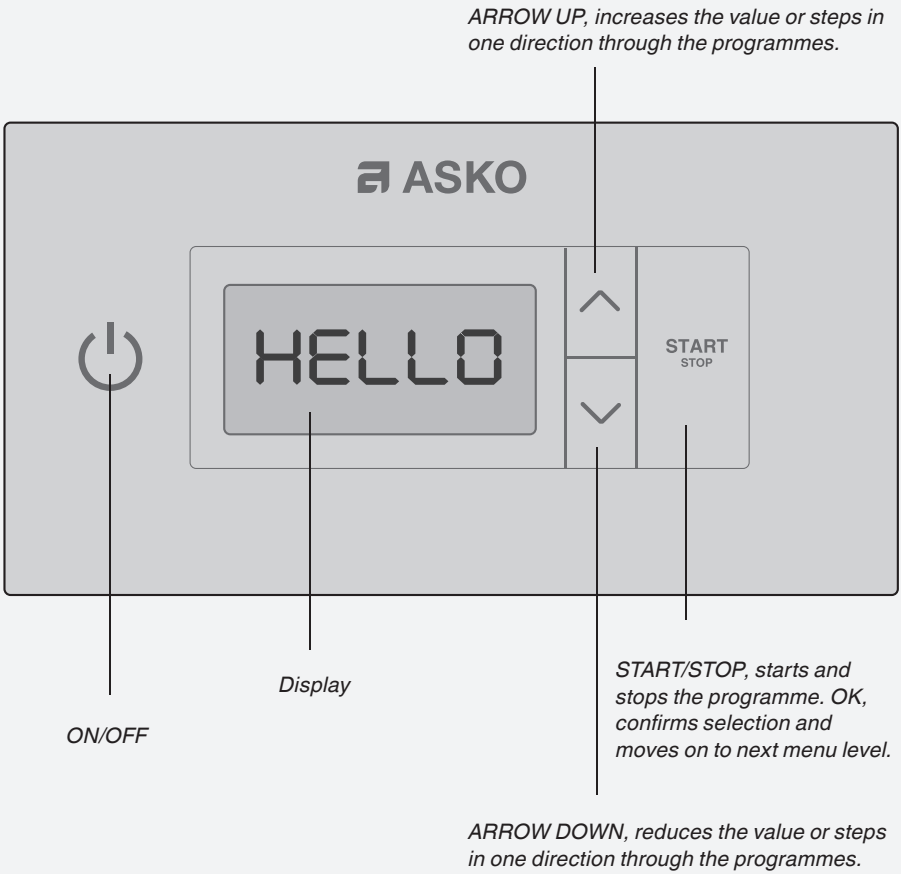

Display

The display has two rows with 6 symbols on each row. The display shows the current parameter and the value of this parameter during setting and adjustment of the drying process.

Instruction text is shown during the drying process.

CONTROL PANEL

Language setting

The following languages can be used: English, Swedish, Norwegian, Danish and Finnish.

1. Make sure that the drying cabinet's main **ON/OFF** switch is off. The display is not lit.
2. Hold in the **ARROW UP** and **ARROW DOWN** buttons and press the main **ON/OFF** switch to the **"ON"** position. The display lights up and "P 105" the parameter for language setting, flashes on the top row. If any other value is shown, use the **ARROW UP** or **DOWN** buttons to step through to the correct parameter.
3. Press **START/STOP** to confirm. The row for the current language now flashes. The languages have a numbering system as shown in the list below.
4. Step through to the desired language using the **ARROW UP** and **DOWN** buttons.
5. To save the set value, press **START/ STOP.**
6. To return to operating value, press **ARROW DOWN** and **START/STOP.**

Language symbol	Display language
0	English
1	Swedish
2	Norwegian
3	Danish
4	Finnish

POSITIONING THE DRYING CABINET

- An earthed electrical socket must be within a distance of 2 m from the bottom of the drying cabinet. The drying cabinet has a 2 m long earthed cable with plug attached at the bottom. The electrical socket must be located so that no extension lead needs to be used.
- The electrical socket should be easily accessible once the cabinet is installed. Please bear this in mind if the drying cabinet has been built into a wooden cabinet.
- The floor where the cabinet is to be placed must be able to hold a weight of around 95 kg.
- The floor must be level, with a drop of no more than 2.5 cm under the cabinet.
- The drying cabinet is only for use indoors at a temperature above 0 °C.
- The drying cabinet should not be installed in a location where high pressure water is used for cleaning.

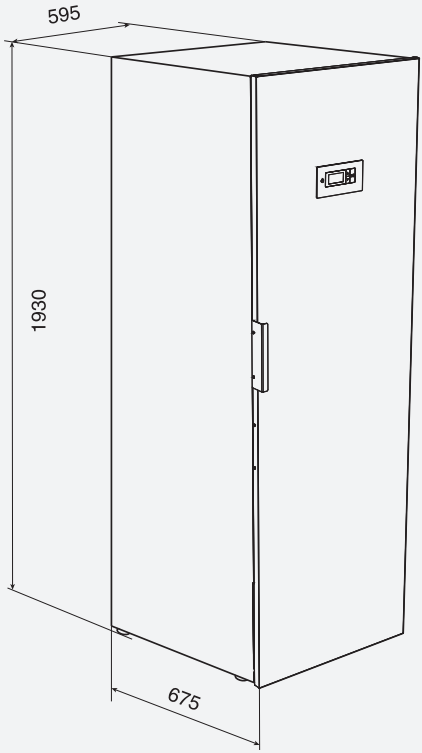

CONDENSATION WATER

Condensation water can be discharged in two ways, either by being collected in a detachable water tank or by being conveyed through a hose to the floor drain.

Detachable water tank

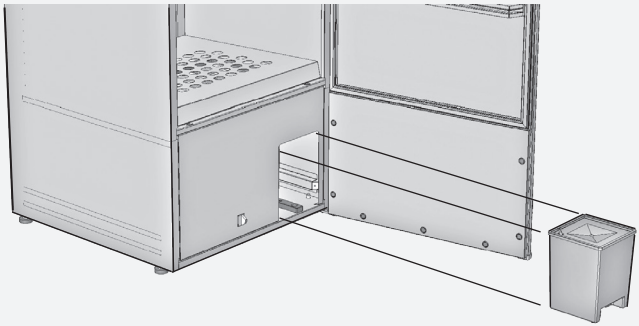

The water tank is dimensioned to be easily adequate for a complete wash. A good rule is always to empty the water tank before each drying of a load of washing.

CONDENSATION WATER

Connection to floor drain

The drying cabinet is supplied from the factory with a hose to the detachable water tank. To change to discharging condensation water to a floor drain, proceed as follows:

1. Carefully pull the upper part of the hose out around 2-3 cm.
2. Cut off the hose in the middle of the opening.
3. Assemble the new drain hose with the nipple provided in the assembly kit, as illustrated. Pull the hose on without hose clips.
4. Place the drain hose in one of the recesses in the panel so there is no risk of it being crushed.
5. Run the drain hose to the drain.
6. If the drain is higher than the outlet of the cabinet, make sure that the hose runs in an arc down to the floor and forms a water trap. There is otherwise a risk of the condensation water flowing back to the tray when the pump is not working. This can cause the tray to fill with water and the cabinet to stop working.

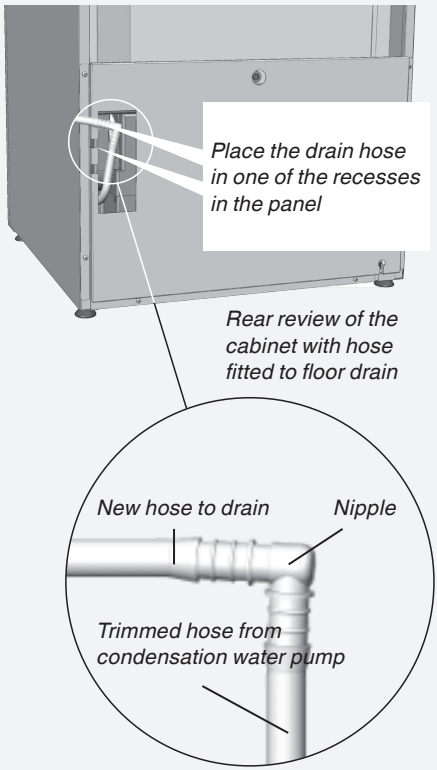

Reconnection to water tank

If you wish to reconnect the condensation water to the water tank, all you need to do is connect the two hoses together again with the nipple.

⚠ NB!

Do not under any circumstances bend the hose so that water flow is obstructed.

INSTALLATION

Unpacking

Check that the product has not been damaged in transit. Any damage in transit must be reported to the retailer within 7 days.

After unpacking, check that the product is free of faults. Damage, defects and any missing parts must be immediately reported to the retailer.

Check that all transportation securing devices have been removed before connecting the drying cabinet.

Packaging materials such as plastic and styrofoam should be kept out of the reach of children.

A COMPLETE DELIVERY WILL INCLUDE:

- Cabinet with dehumidifier unit
- Assembly kit
- Installation and User Manual

Assembly kit

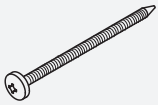

2 screws TRX 5x45 fzk for wall mounting

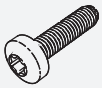

4 screws MRT 5x20 for fixing bracket

2 nylon wall plugs

2 brackets for wall attachment

1.5 m plastic hose 10 x 13

1 nipple for water hose

Hand brush for filter

INSTALLATION

Reversing the door

The cabinet is supplied from the factory right-hung. The door can subsequently be rehung on the opposite side. A rehanging set is required to rehang the door. This can be ordered as a spare part.

Rehanging set

- Connector for cables.
- New cable with plastic bushing.
- Upper hinge, 1 right and 1 left.

1 Undo the cabinet from the wall and turn it so that you can access the rear.

2 Undo the three screws (1) holding the cover in place as per the picture and remove the cover.

3 Carefully place the cabinet on its back.

4 Remove the cover (2) for the upper hinge and release the door cable (3) and remove the cable from the connector (4). Remove the upper hinge (5), which is held in place with two screws. Carefully loosen the hinge from the cable. The hinge is provided with a slit through which the cable is threaded in or out.

5 Lift the door off the drying cabinet.

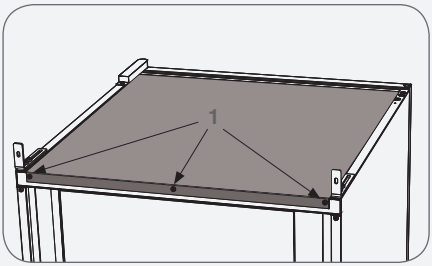

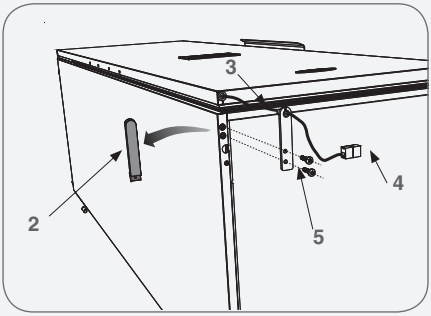

The picture shows rehanging from right hung to left hung

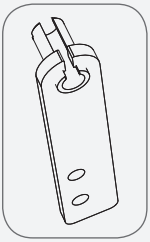

INSTALLATION

6 Lay the door down carefully with the inside facing upwards. Undo all the screws holding the upper panel in place. The screws are located under the magnetic strips. Remove the hangers and lift off the panel together with the magnetic strip.

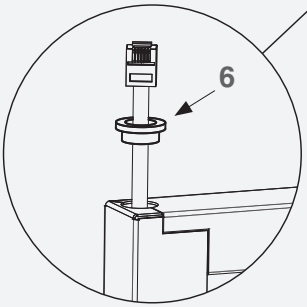

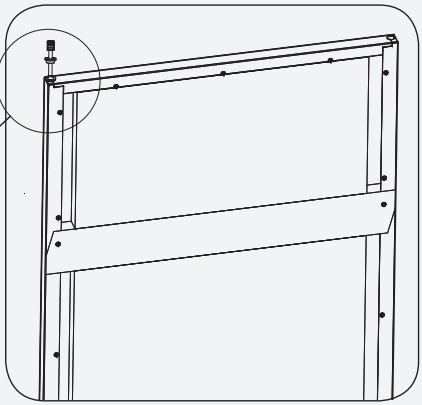

Door with inner panel and magnetic strips removed

7 Press the plastic bushing (6) out of the door and cut it. Then pull the cable through the hole in the door.

8 Fit the connector (7) using the double-sided tape and fit the old cable to the connector. See figure.
Fit the new cable (8) with the plastic bushing to the new hinge side and fit the other end to the connector. To make fitting the cable simpler, you may need to loosen the upper foam board.

9 Refit the door panel and hangers. Make sure that the magnetic strip is correctly positioned.

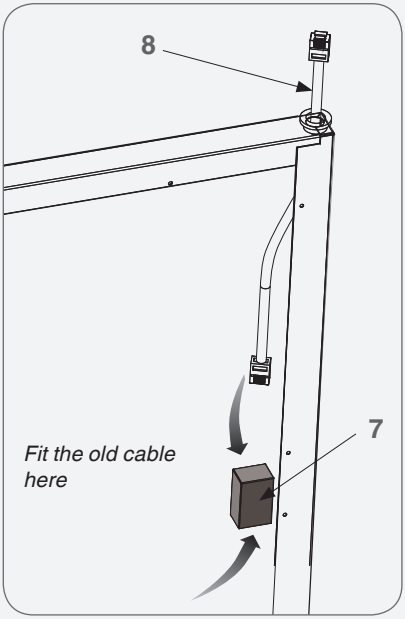

INSTALLATION

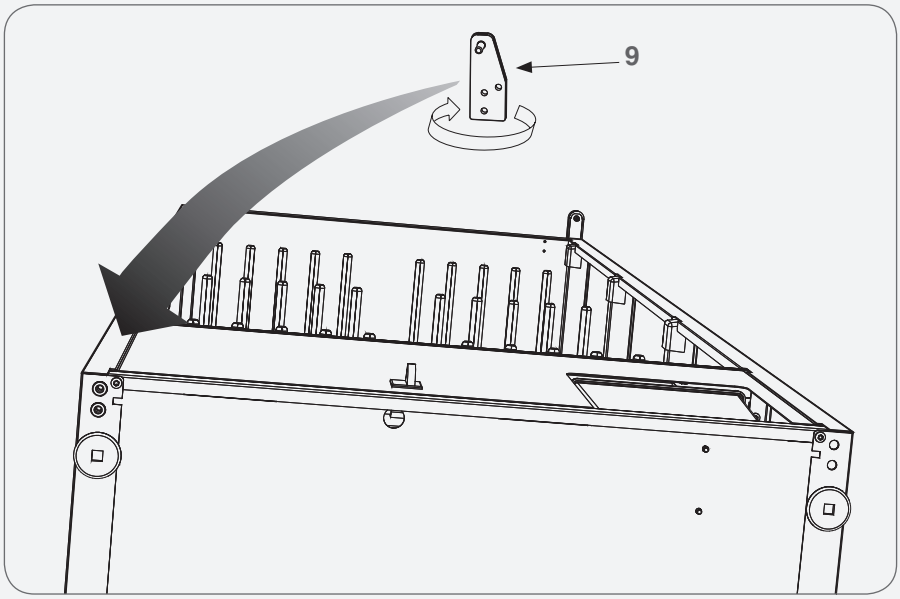

10 Move the lower hinge (9) to the other side. The hinge should be reversed and the hinge pin unscrewed and remounted on the other side of the hinge..
Make sure that the hinge pin is tightened securely.

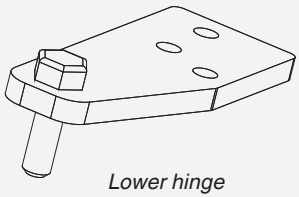

Lower hinge

11 Place the door on the cabinet and take the new upper hinge and carefully thread in the new cable. Fit the hinge and protective cover. Connect the cable to the connect in the top.

12 Raise the cabinet and refit the cover.

13 Put the cabinet in place and **secure it to the wall.**

14 You must wait at least 1 hour before using the cabinet. This is to allow the oil in the compressor to run back. The compressor may otherwise be damaged.

INSTALLATION

Placement/attachment

The drying cabinet is only designed for operation indoors in a dry environment.

The drying cabinet should not be installed in a location where high pressure water is used for cleaning.

LEVELLING

The drying cabinet should stand level on a flat surface, resting on all four feet.

Correct the position of all four adjustable feet from the outside.

ATTACHMENT TO WALL

The cabinet must be attached to a wall to prevent tipping over.

The assembly kit contains two angle brackets mounted on the top of the drying cabinet as illustrated. Use the screws provided. The brackets have slots for adaptation to the wall.

Secure the cabinet to the wall. Screws for fixing, washers and plastic plugs are provided in the assembly kit.

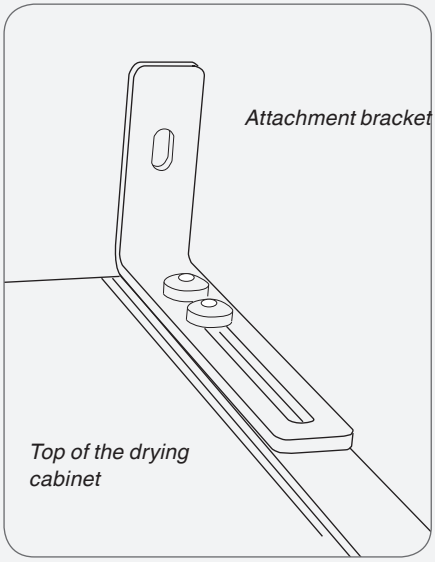

⚠ WARNING!

The drying cabinet should not be used without being screwed to a wall due to the risk of tipping forwards.

INSTALLATION

Electrical connections

The drying cabinet should be connected to a 230V single-phase 50 - 60 Hz earthed socket.

The drying cabinet is supplied ready for connection with a cable with an earthed plug.

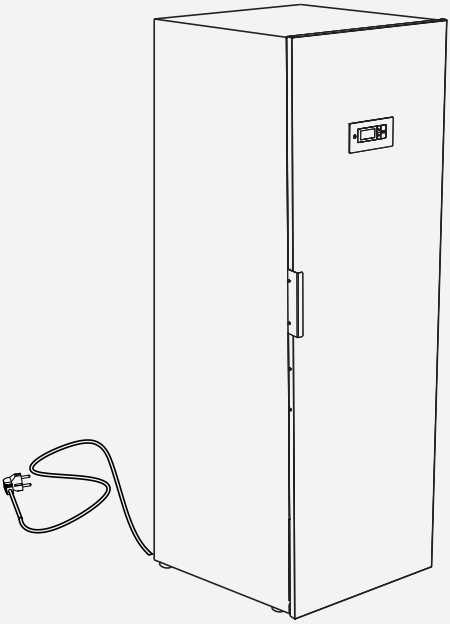

The drying cabinet should be connected using the cable supplied to an earthed wall socket, and must not be permanently connected!

The socket should be located where the plug can be easily disconnected when required.

Check that the supply current matches that stated on the rating plate and that the mains lead is earthed correctly according to current standards. We recommend that the mains lead be fitted with a residual current device (RCD).

The appliance must be connected to a dedicated circuit.

The manufacturer cannot be held liable if the electrical connections are not carried out as prescribed in this manual.

START-UP

Read this user manual before using the drying cabinet for the first time.

1 Check that the cabinet is firmly attached to the wall.
See page 19.

2 Check that no packaging material has been left behind.

3 Use a mild detergent with hot water and wash the inside and outside of the drying cabinet. Dry carefully. See also the 'Care' section later in the manual.

⚠ WARNING!

Read the safety instructions on page 5 before using the drying cabinet.

OPERATION

The cabinet contains three sections with hangers. Each section has a number of bars on which to hang the washing.

- Hang the articles in the drying cabinet according to how much space they require, not according to their weight.
- Turn up the two bottom hanger sections if long garments are to be dried.
- Hang gloves, caps, scarves and similar items on the hanger strips on the inside of the door.
- Draw the hanger hooks in the upper hanger section forward so that the washing can be hung more easily. Push them back when not in use.
- Do not overload the drying cabinet. If you do, the washing will become creased and dry unevenly. Instead, leave a space between the garments if possible.
- If there is a risk of the colour running in certain laundry, you should leave a space around this.
- Do not place shoes or similar items on the shoe rack in such a way that they obstruct the air flow.
- Avoid drying heavy items of clothing together with lighter items as they have very different drying times.
- Make sure not to hang knitted items. These will stretch unnecessarily as they are heavy when wet.
- Avoid hanging textiles that are dripping or soaking wet in the drying cabinet, as the drying cabinet is not intended to collect large volumes of water. This also leads to abnormally long drying times.

OPERATION

User tips

- Always follow the washing instructions on garments if such instructions are provided.
- If fabric softener or antistatic product is used, the manufacturer's instructions concerning its use should be followed.
- Remove washing that is already dry. This will reduce the drying time for remaining washing.

⚠ WARNING!

Do not dry garments or similar items that have been treated with petrol or other volatile and flammable substances. This may lead to the formation of an explosive gas mixture.

⚠ NB!

When the cabinet is cold, it can happen that the sealing strip in the door does not close completely. However, this is fully compensated when the cabinet warms up as the sealing strip expands.

⚠ NB!

If the sealing strip does not close completely, or if the door has a tendency to want to open, this may be due to the cleaning filter not having been installed correctly.

Make sure that the cleaning filter and the filter holder are pressed down so that no air leakage occurs.

OPERATION

Drying programme

The drying cabinet is equipped with two automatic drying programmes:

- NORMAL DRY
- EXTRA DRY

THE PROGRAMMES SWITCH THE DRYING PROCESS OFF AUTOMATICALLY WHEN THE ITEMS OF CLOTHING ARE DRY.

Selecting a drying programme

- NORMAL DRY – Used for drying of garments of normal thickness.
- EXTRA DRY – Used for drying of thicker garments, deep drying.

SETTING THE DRYING PROGRAMME

Starting the drying programme

■ MOST RECENTLY USED DRYING PROGRAMME

Press the ON/OFF switch to the “ON” position, indicated by the display lighting up and showing the most recently run programme.

If this is the programme you want, press **START/STOP.**

Otherwise choose another drying programme by stepping **UP** or **DOWN** with the arrow keys.

Then start the drying programme with the **START/STOP** button.

■ DOOR OPEN

If the door is open when the drying programme is started and the **START/STOP** button is activated, the display shows "CLOSE DOOR".

Close the door and the selected drying programme will start.

■ IN OPERATION

The animated symbol (bar) on the left-hand side of the display indicates that the drying process is in progress.

■ CONDENSATION WATER TANK

If the condensation water tank becomes full, the drying process is immediately discontinued and the display will show "CHECK WATER TANK".
Empty the water tank and re-start the drying process.

■ COOLING

During the cooling period the display shows the text "COOL" and counts down to 5 minutes remaining.

SETTING THE DRYING PROGRAMME

■ **PROGRAMME END**

When the cooling period has ended, the drying process is finished, and the display shows the text "END" (flashing).

When the START/STOP button is pressed after the door is opened, the current programme is stopped and the display shows the most recently used programme.

⚠ NB!

In waiting mode the display goes off after 15 min and lights up again when any of the buttons on the control panel is activated or the door is opened.

⚠ NB!

Empty the condensation water tank after each drying process.

Stopping the drying programme

To discontinue a drying process in progress, press **START/STOP.**

The door is opened

If the door is opened when the drying process is under way, the drying process will continue for a further 5 minutes. The display will show "CLOSE DOOR" and a programme pause period of 5 minutes will be counted down.

If the door is closed within this 5 minute period, the drying process continues.

If the door is left open, the drying process is discontinued after 5 minutes and has to be re-started manually.

If you wish to discontinue the drying process immediately, without a 5 minute period, press **START/STOP.**

SETTING THE DRYING PROGRAMME

There are options for optimising the drying cabinet's two drying programmes for best results.

The setting is adjusted on the control panel for the programme concerned.

This is only to be done if you find that:

- The washing is not dried sufficiently.
- The washing is over-dried – long drying time.

Introduction

The drying cabinet is equipped with two drying programmes, **NORMAL DRY** and **EXTRA DRY.**

The programmes end automatically when the washing is dry.

To decide when the washing is dry, a measured value is compared with a factory-set parameter:

parameter **P 2072** for the **NORMAL DRY** programme and parameter **P 2071** for the **EXTRA DRY** programme.

It is primarily these two parameters that are adjusted to optimise the drying process.

- If you find that washing is not dried sufficiently in;

  NORMAL DRY drying programme, ***reduce*** the parameter value for **P 2072.**

  EXTRA DRY drying programme, ***increase*** the parameter value for **P 2071.**

- If you find that washing is over- dried, long drying time in:

  NORMAL DRY drying programme, ***increase*** the parameter value for **P 2072.**

  EXTRA DRY drying programme, ***reduce*** the parameter value for **P 2071.**

Optimisation of the drying process must always take place in small steps; start by adjusting the parameter concerned by 1-2 units up or down, then check the result after the next drying process and if appropriate make a further adjustment.

SETTING THE DRYING PROGRAMME

Procedure

The drying cabinet's parameter list is accessed through the control panel. The parameter list is shown as follows: on the top row of the display the current value is shown, e.g. P 2071, on the bottom row the set value of the parameter is shown.

1. Make sure that the drying cabinet's main **ON/OFF** switch is off. The display is not lit.
2. Hold in the **ARROW UP** and **ARROW DOWN** buttons and press the main **ON/OFF** switch to the "ON" position. The display lights up and shows the parameter "P 105" and the factory-set value for **P 105.** The row with the parameter concerned flashes on the display.
3. Step through to the parameter concerned by pressing on the **ARROW UP** or **DOWN** button repeatedly. If you go too far, all you need to do is continue stepping forward until the display shows the correct parameter.
4. When the display shows the correct parameter, e.g. "P2072", press **START/ STOP** to confirm parameter selection. The row now flashes with the set value of the parameter.
5. Increase or reduce the parameter value using the **ARROW UP** or **DOWN** buttons.
6. To save the set value, press **START/ STOP.**
7. To return to the operating value, press the **ARROW DOWN** and **START/ STOP.**

Resetting to factory setting

1. Go to parameter display mode as described in 1-2 above.
2. Hold down the **ARROW UP** and **ARROW DOWN** buttons and press **START/ STOP.** The factory settings will be saved and the display will show the most recently run programme.

CARE

Cleaning

⚠ NB!

High-pressure cleaning should not be used!

⚠ NB!

Cleaning and maintenance must not be performed by children without supervision.

The walls of the cabinet should be cleaned with a mild soap solution and a damp cloth.

The shoe rack must be removed for each drying process and the cleaning filter below the rack should be cleaned. See fig.

Brush the cleaning filter clean with the brush supplied.

Replacement parts

If the connecting cable is damaged for any reason, it must be replaced. Genuine parts can obtained from the cabinet retailer.

⚠ NB!

A replacement lead may only be installed by the manufacturer, the manufacturer's service agent or another authorised electrician.

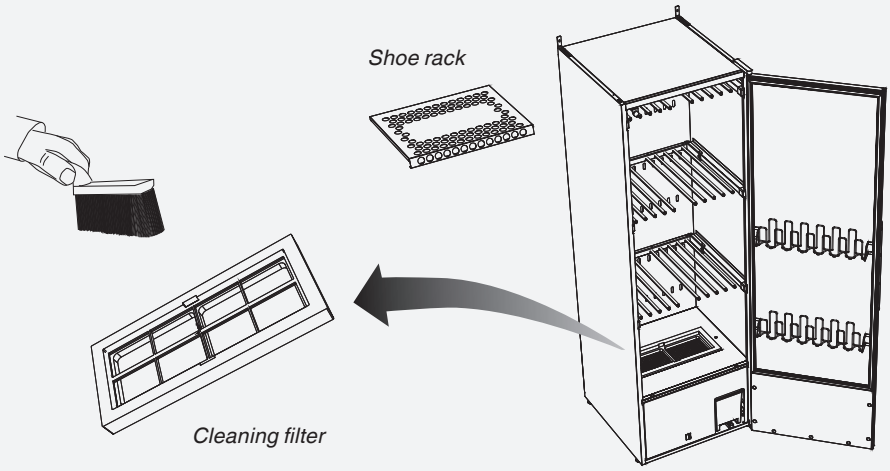

CARE

Service

Before contacting service, you should find out the name, article number and serial number of the drying cabinet.

This information can be found on the rating plate located inside the cabinet.

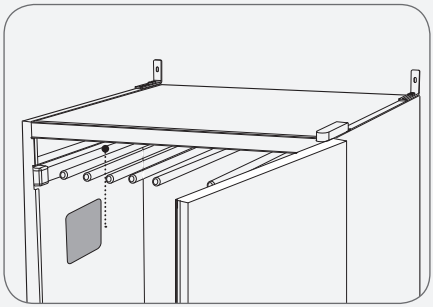

Rating plate (inside)

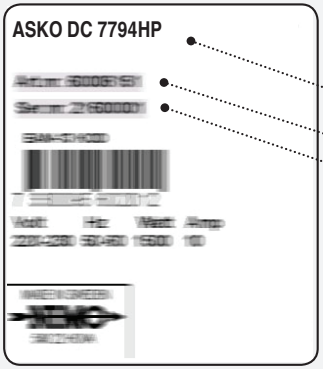

Name of the drying cabinet
Article number
Serial number (12 digit)

TROUBLESHOOTING

Issues	Action
The drying cabinet does not work	1. Check that the mains lead is plugged in. 2. Check that no fuse has blown. 3. Have you pressed the start button? 4. Is the door closed? 5. Is the water tank in position and empty?
The display shows CHECK WATER TANK See pictures	1. Empty the water tank 2. Check that the lid is fitted so that the float protrudes out of the opening in the lid and the arm runs freely. 3. Check that the water tank is turned so that the float is inside the tray. 4. If none of the above works, the safety switch for a defective pump may have been activated. If so, continue according to the points below. **SHOULD BE CARRIED OUT BY A SERVICE ENGINEER** 5. Turn off the power. 6. Remove the shoe stand. 7. Remove the lint filter. 8. Check if there is water in the tray. If so, move on to the points below. 9. Check whether the drain hose is squashed or bent, causing a crease, or whether the hose is drawn too vertical to drain, causing a 'water trap' to form. 10. Loosen the grille over the tray, which is held in place by two screws, torx 40. 11. Loosen the panel holding the cover over the pump. It is held in place with 1 torx 40 screw. 12. Remove the foam cover over the pump. 13. Undo the panel holding the micro-switch and moisture sensor. It is held in place with 1 torx 40 screw. Remove the float. 14. Absorb the water with a sponge or cloth. 15. Refit and check that there is a gap of 1-3 mm between the micro-switch and the float. 16. Refit the other parts. 17. Connect the electricity and test the cabinet. The pump will start pumping immediately. 18. If the problem remains, the entire unit must be replaced.

TROUBLESHOOTING

Issues	Action
The display shows CLOSE THE DOOR See pictures	**SHOULD BE CARRIED OUT BY A SERVICE ENGINEER** 1. Check that the door seals correctly so that the door switch is activated. (The switch is located at the bottom of the cabinet on the cover panel in front of the heat pump unit). 2. If necessary, tape the switch in place and check if the warning disappears from the display. 3. If none of the above work. Switch off the power. Remove the front panel (see description in section 4 Removing the dehumidifier unit). 4. Check that the cables to the door switch are intact and connected properly. It is fitted with 2 cable sockets against the door switch with a contact in the tray. 5. If the problem persists, the door switch is probably defective and needs replacing. 6. Undo the lock plate and press the door switch out from the front panel. 7. Refit in the reverse order.
The display shows an alarm/fault code	This should normally never happen, but if an alarm or fault code appears, try first to reset the alarm by holding down the Start/Stop button for 5 seconds. If the problem persists, then use the fault code list on page 22 to try to localise the fault. Try to correct the indicated fault, but if the fault persists, the entire unit (heat pump tray) will need to be replaced.
Drying takes too long	1. Clean the cleaning filter (preferably after each drying). 2. Check that the water tank is empty. 3. Check that the correct programme has been selected for the type of washing. 4. Check that the washing is not very wet (poorly spun). 5. Check that too much washing has not been hung up.
The washing will not dry	1. Check that the correct programme has been selected for the type of washing. 2. Check that too much washing has not been hung up. 3. Adjust the parameters 2072 and 2071 according to the section on parameter adjustment.

TROUBLESHOOTING

Issues	Action
The sealing strip does not seal tightly / the door is ajar	1. Check that the cabinet is level. Check with a spirit level and adjust the adjustable feet if necessary. 2. Check that the cleaning filter and its holder are correctly installed. The holder must be pressed down towards the heat pump unit below and locked using the turning lock angles to seal properly. 3. Check that no debris, grit or similar material has ended up below the holder for the cleaning filter, as this will not seal satisfactorily.

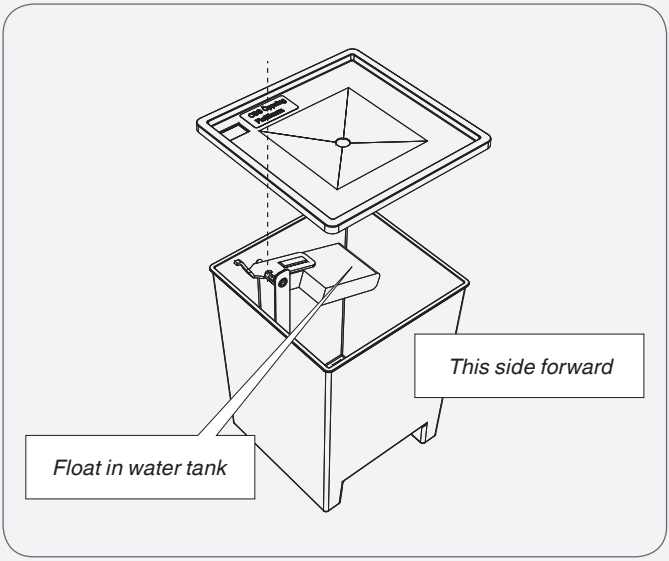

Water tank with cover removed

TROUBLESHOOTING

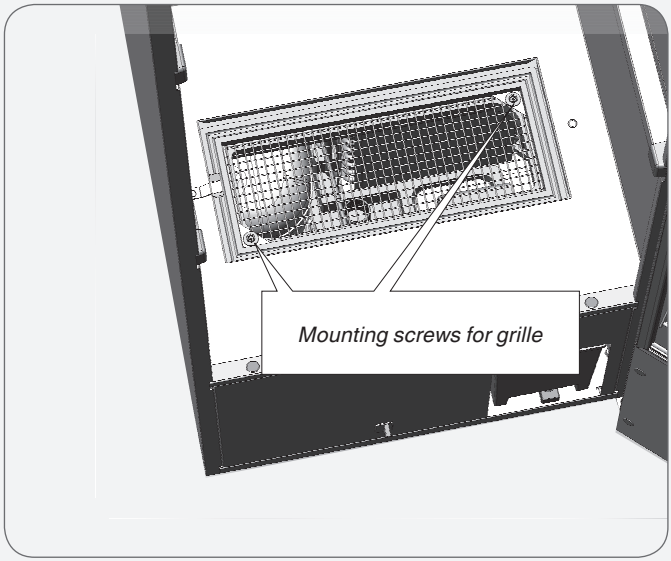

Grille over the tray and then shoe stand and lint filter removed

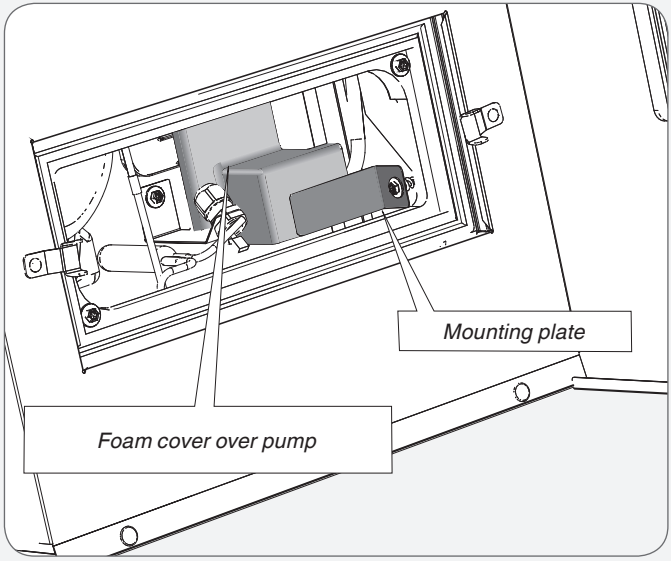

Foam cover and mounting plate

TROUBLESHOOTING

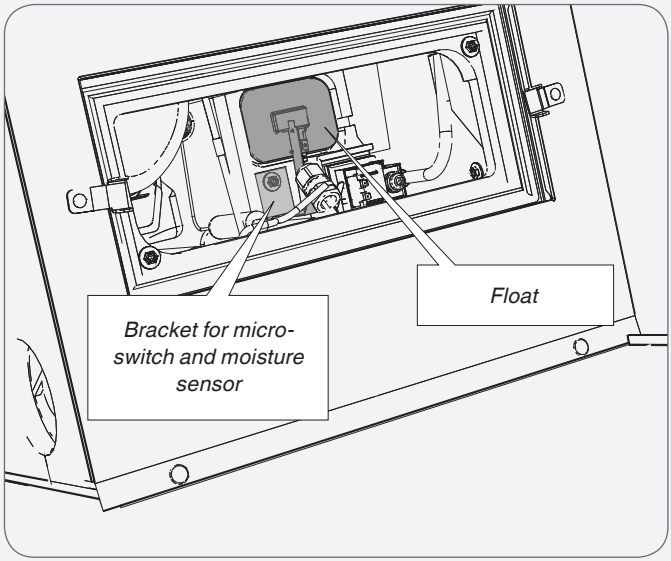

Here the foam cover and mounting plate have been removed

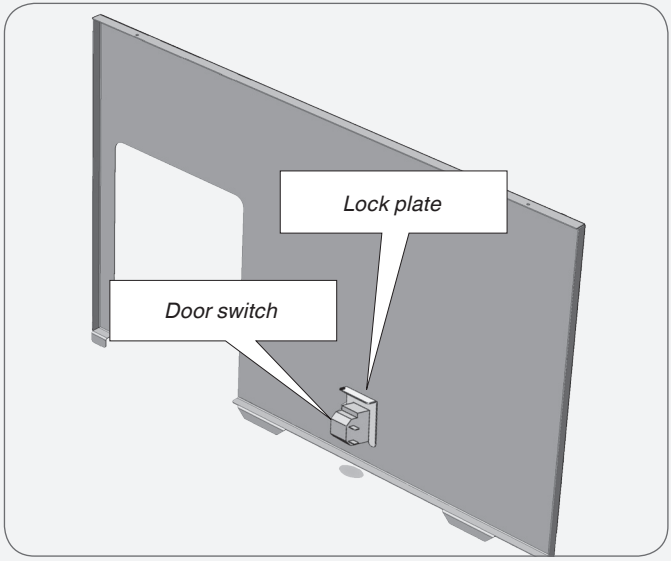

Front panel with door switch

FAULT CODE LIST

Describes the relevant fault codes for this product.

Nr.	Name	Description
FAULT 03	Fault in moisture sensor	Sensor is outside its range
FAULT 04	Maxtid process	Maximum time for drying process exceeded (the preset value 180 min can be changed using parameter P 2073).
FAULT 06	Check water pump	The high water level in the tray has activated the switch for the float.
FAULT 12	Timeout communication	The communication between the user interface and electronics has been temporarily interrupted.

To reset the alarm, press and hold the **START/STOP** button for 5 seconds.

TECHNICAL DATA

Capacity:	approx. 4.0 kg washing (cotton)
Dewatering capacity:	22 g/min
Electrical connection:	single-phase 220 - 240 V, 50 Hz, 10A
Output:	900 W
Capacity of main fan:	945 m^3/h (free blow)
Capacity of secondary fan:	160 m^3/h (free blow)
Hanging length:	16 metres
Dimensions:	Height 1930 mm
Width	595 mm
Depth	675 mm
Weight:	95 kg
Sound level:	A-weighted emission sound pressure level is less than 70 dB(A)
Refrigerant:	R 407C, 0.3 kg
Leak tightness test:	28 bar

TECHNICAL DATA

ENERGY CONSUMPTION AND DRYING TIME WHEN DRYING SPUN WASHING *

Programme	Energy consumption kWh/kg washing	Drying time	Temp. max
NORMAL DRY	0,3	90 min	55 °C
EXTRA DRY	0,4	120 min	55 °C

* Values may vary depending on:

- spin speed
- temperature and air humidity in the room
- air circulation in the room (supply air, exhaust air)

MANUFACTURING STANDARDS

See cabinet's rating plate.

Electrical diagram

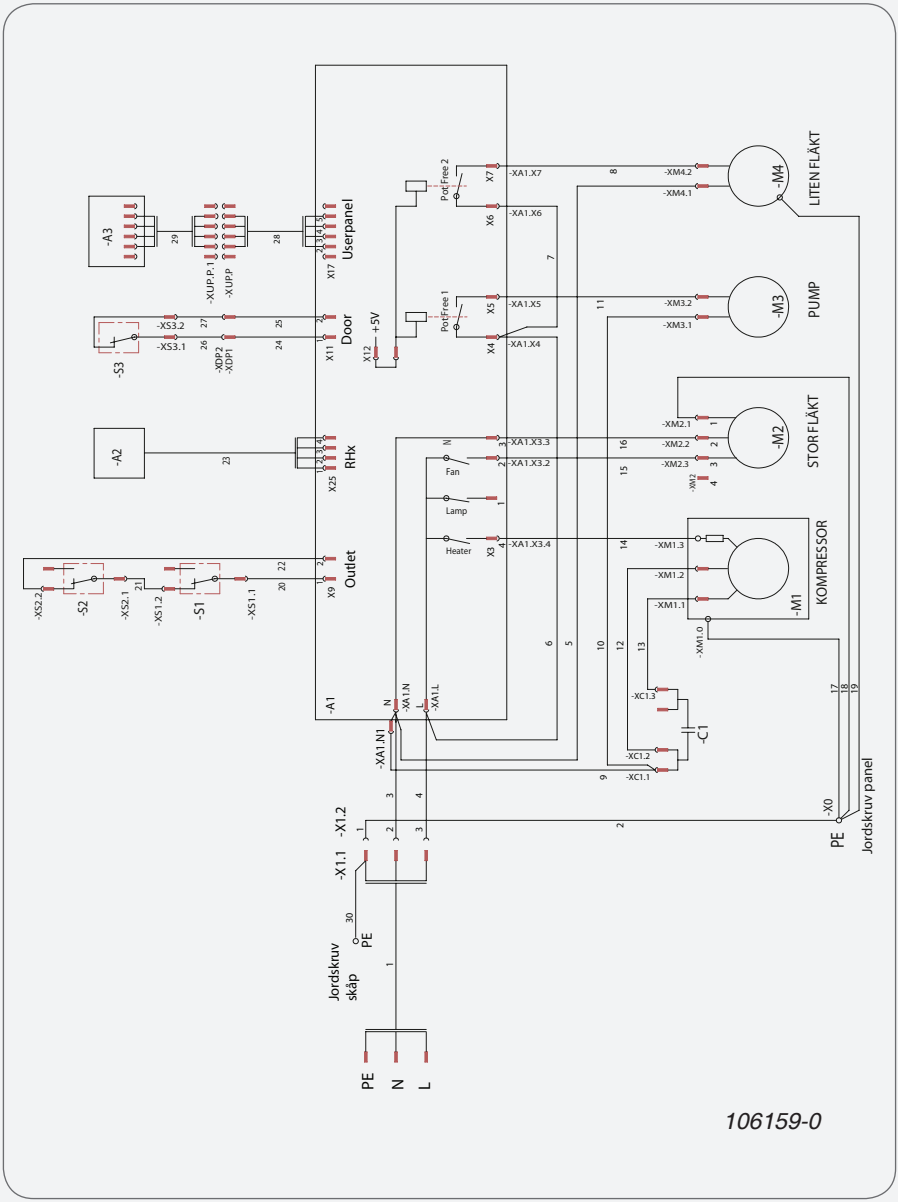

SERVICE APPENDIX

Removing the dehumidifier unit

The dehumidifier unit consists of a closed unit in the bottom of the cabinet.

The entire unit must be removed for servicing.

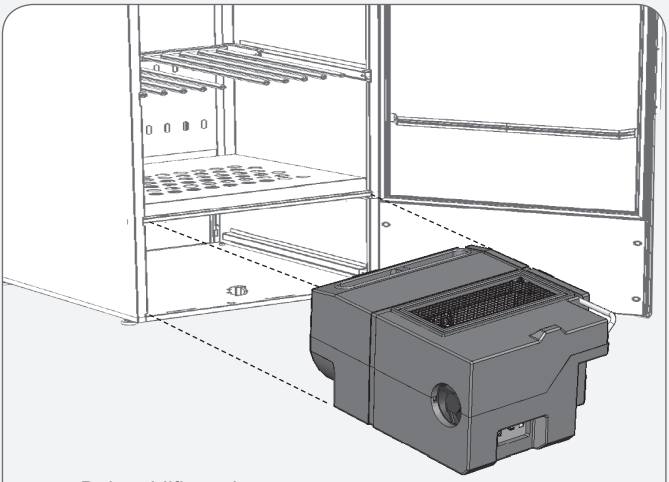

Dehumidifier unit

FROM REAR

1 Undo the cabinet from the wall and turn it so that you can access the rear.

2 Unscrew 3 screws (1). The screws have torx T40 screw heads.

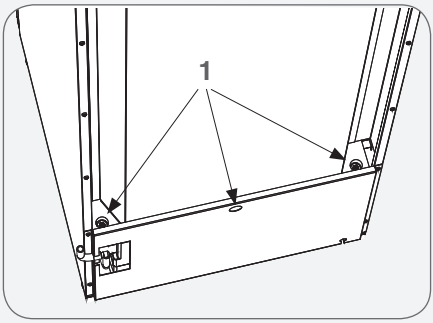

SERVICE APPENDIX

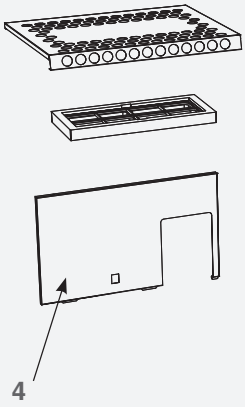

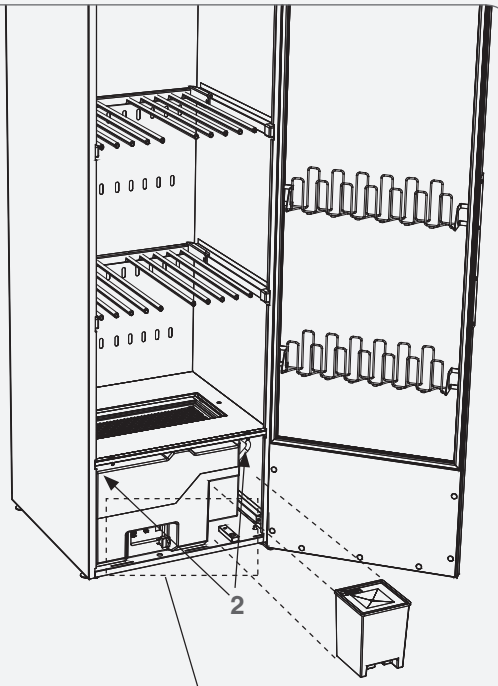

After completing the service, fit the unit inside the drying cabinet in the reverse order.

Once the cabinet is in place, it is very important that the cabinet is secured to the wall.

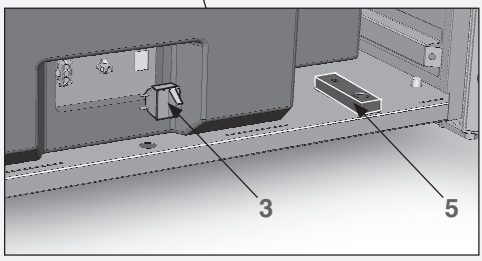

The door switch (3) is fitted to the front panel (4).
See picture on page 33.

SERVICE APPENDIX

FROM FRONT

3 Remove the shoe stand and dismantle the filter holder.

4 Remove the cover plugs and detach the front panel held in place with 2 screws (2) (torx T20). Detach the cable for the door switch (3).

5 Detach the network cable and communication cable.

6 Remove the water tank.

7 Unscrew the runner (5) for the water tank. A screw holds the runner in place.

8 Remove the dehumidifier unit.

ASKO

Swedish quality since 1950

www.asko.com

We reserve the right to make changes.

MIX
Paper from responsible sources
FSC® C114278
FSC
www.fsc.org

CE ASKO DC7794HP

123456

en (05-15)