ASKO

Dear customer!

Thank you for choosing this quality product from ASKO. We hope it will meet your expectations and fulfil your needs for many years to come. Scandinavian design combines clean lines, everyday functionality and high quality. These are key characteristics of all our products and the reason they are greatly appreciated throughout the world.

Installation Instructions

DESIGN GUIDE

BEFORE YOU BEGIN

Read these instructions completely and carefully.

- IMPORTANT - Save these instructions for local inspector's use. Observe all governing codes and ordinances.
- **Note to Installer** - Be sure to leave these instructions with the Consumer.
- **Note to Consumer -** Keep these instructions for your future reference.
- **Skill Level -** Installation of this refrigerator requires basic mechanical, carpentry and plumbing skills. Proper installation is the responsibility of the installer. Product failure due to improper installation is not covered under the Asko Warranty.

WARNING:

This appliance must be properly grounded. See "**Electrical Specifications**," page 5.

CAUTION:

Due to the weight and size of this refrigerator, and to reduce the risk of personal injury or damage to the product—TWO PEOPLE ARE REQUIRED FOR PROPER INSTALLATION.

WARNING:

- These refrigerators are top-heavy and must be secured to prevent the possibility of tipping forward. Anti-tip protection is required.
- Use this appliance only for its intended purpose.
- Immediately repair or replace electric service cords that become frayed or damaged.
- Turn off the circuit breaker to disconnect power before cleaning or making repairs.
- Repairs should be made by a qualified service technician.

⚠ WARNING–R600a Refrigerant

This appliance contains isobutane refrigerant, R600a, a natural gas with high environmental compatibility. However it is also combustible. Please adhere to the warnings below: If you received a damaged refrigerator, you should immediately contact your dealer or builder.

1) When handling, installing and operating the appliance, care should be taken to avoid damage to the refrigerant tubing.
2) Servicing shall be performed by factory-authorized service personnel and component parts shall be replaced with manufacturer-authorized replacement components.
3) Refrigeration products contain refrigerants, which under federal law must be removed prior to product disposal.
4) Keep ventilation openings in the appliance enclosures or in the built-in structure clear of obstruction.
5) Do not use mechanical devices or other means to accelerate the defrosting process.
6) Do not damage refrigerant circuit.
7) Do not use electrical appliances inside the food storage compartment of the appliance.

Cabinet Enclosure Dimensions For Fully Integrated Instructions

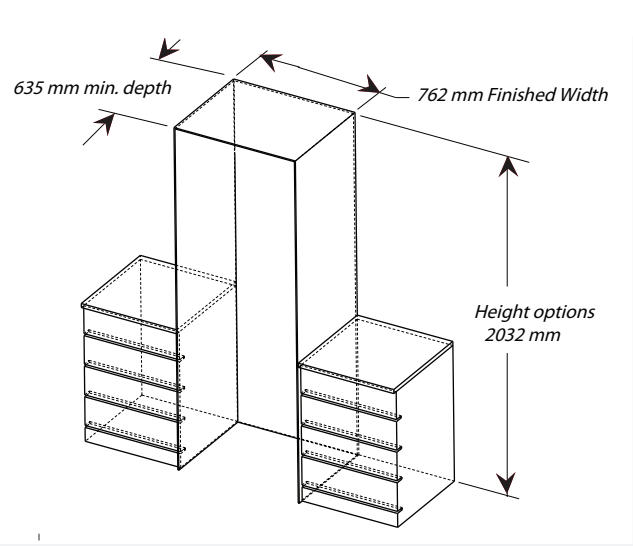

The cutout depth must be 635 mm for flush installations.

- The front face of the refrigerator fits flush with 635 mm depth adjacent cabinets.
- The refrigerator can fit into a 2020 mm minimum, 2044 mm maximum high enclosure. Although the refrigerator itself can only be raised to 2041 mm.

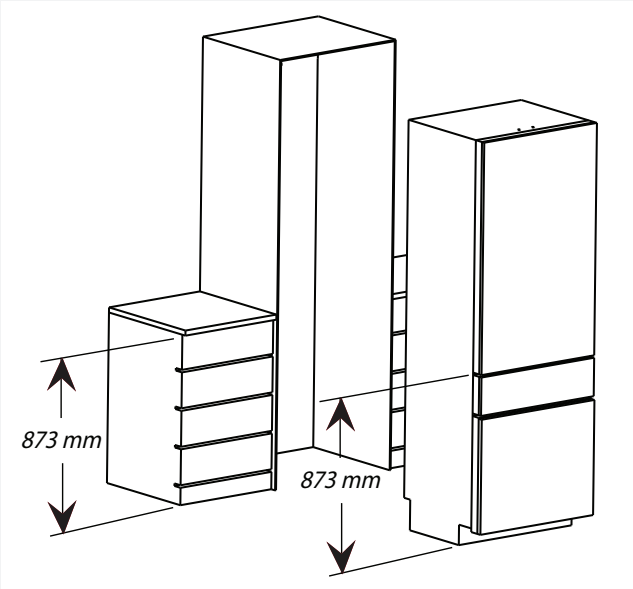

Design Tip: It is possible to align your refrigerator drawer with adjacent cabinetry for a completely integrated look.

Refrigerator Dimensions with 19 mm Panels

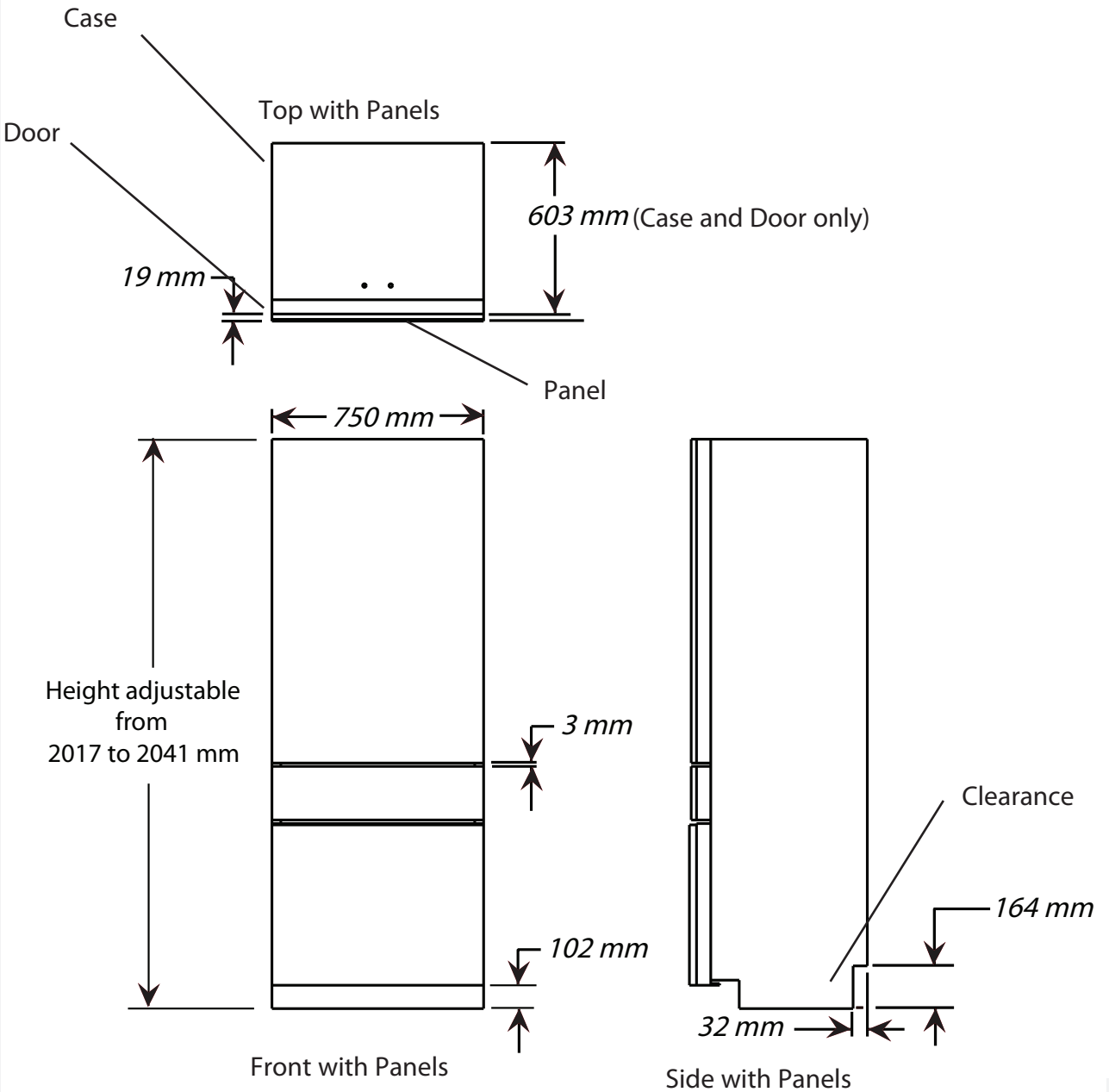

Install Clearances		
Top	Each Side	Rear
3 mm	6 mm	12 mm

THE INSTALLATION SPACE

Water and Electrical Locations

Electrical and water supply should be located in shaded area only as shown.

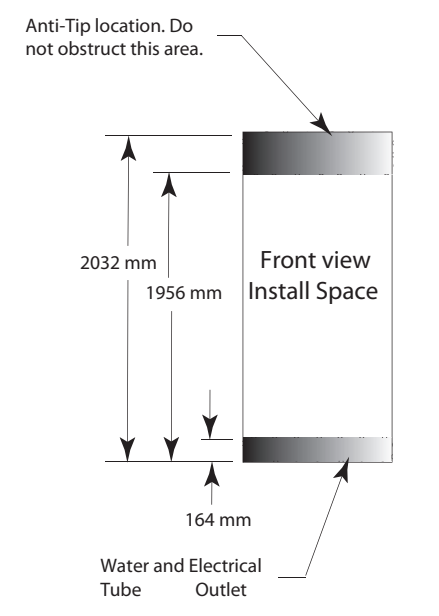

PREPARING INSTALL WATER LINE

- A cold water supply is required for automatic icemaker operation. The water pressure must be between 3 bar - 8 bar.
- Route enclosed water tube between the house cold water line and the refrigerator water connection located at the back of the unit.

Electrical Specifications

- A 220-240 V, 50/60 Hz, 10 A power supply is required. An individual properly grounded branch circuit or circuit breaker is recommended.
- Install a properly grounded 3-prong electrical receptacle recessed into the back wall. Electrical outlet must be located on rear wall as shown.

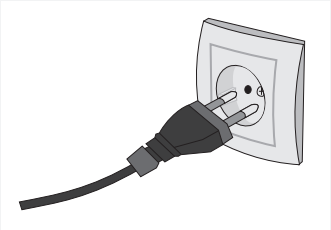

Product Clearances

These refrigerators are equipped with a 2-position door stop. The factory-set 115° door swing can be adjusted to 90° if clearance to adjacent cabinets or walls is restricted.
For 90° Door swing see page 7.

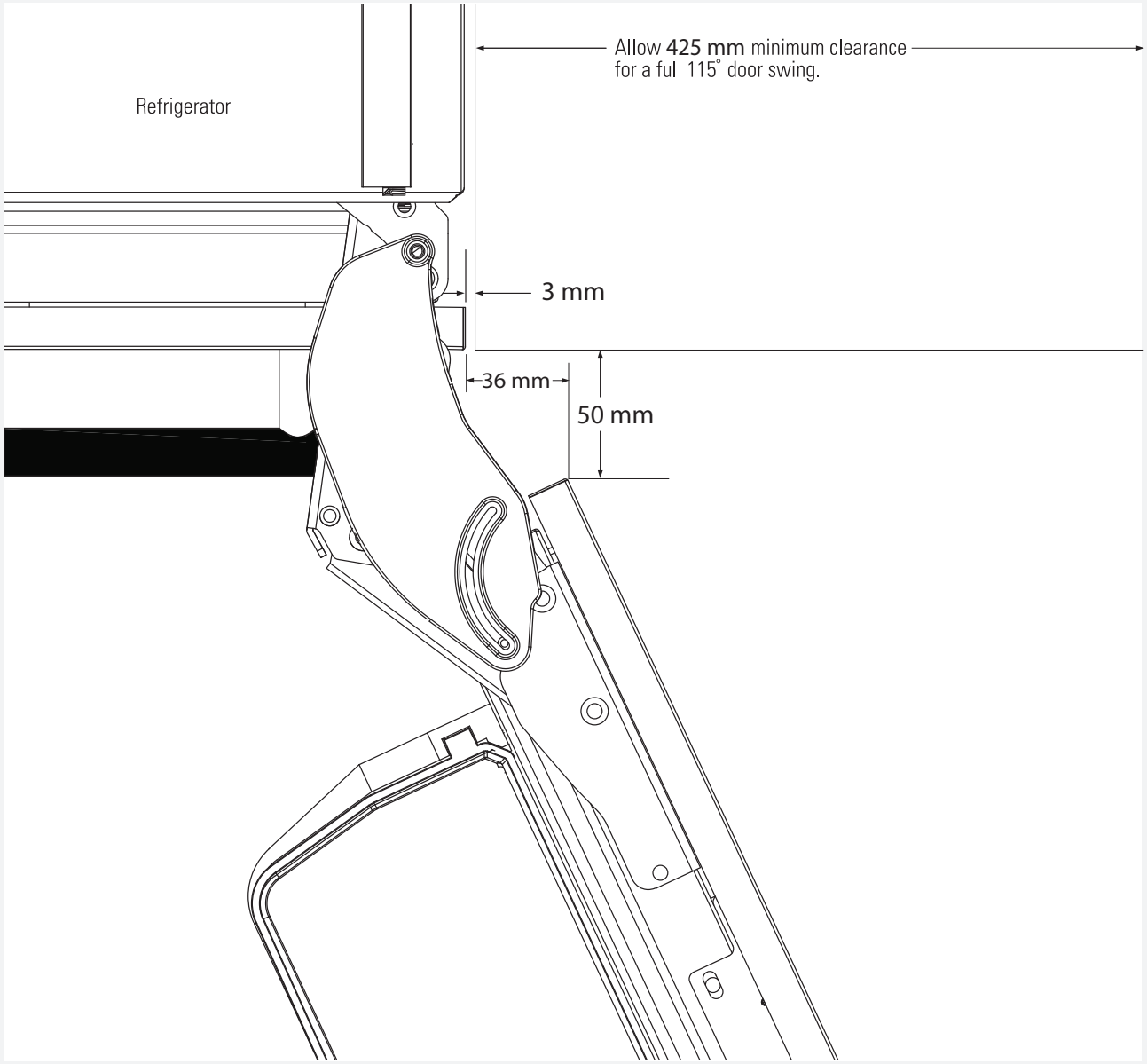

Stainless Steel or Custom Panels

Top View
115° DOOR SWING
(factory setting)

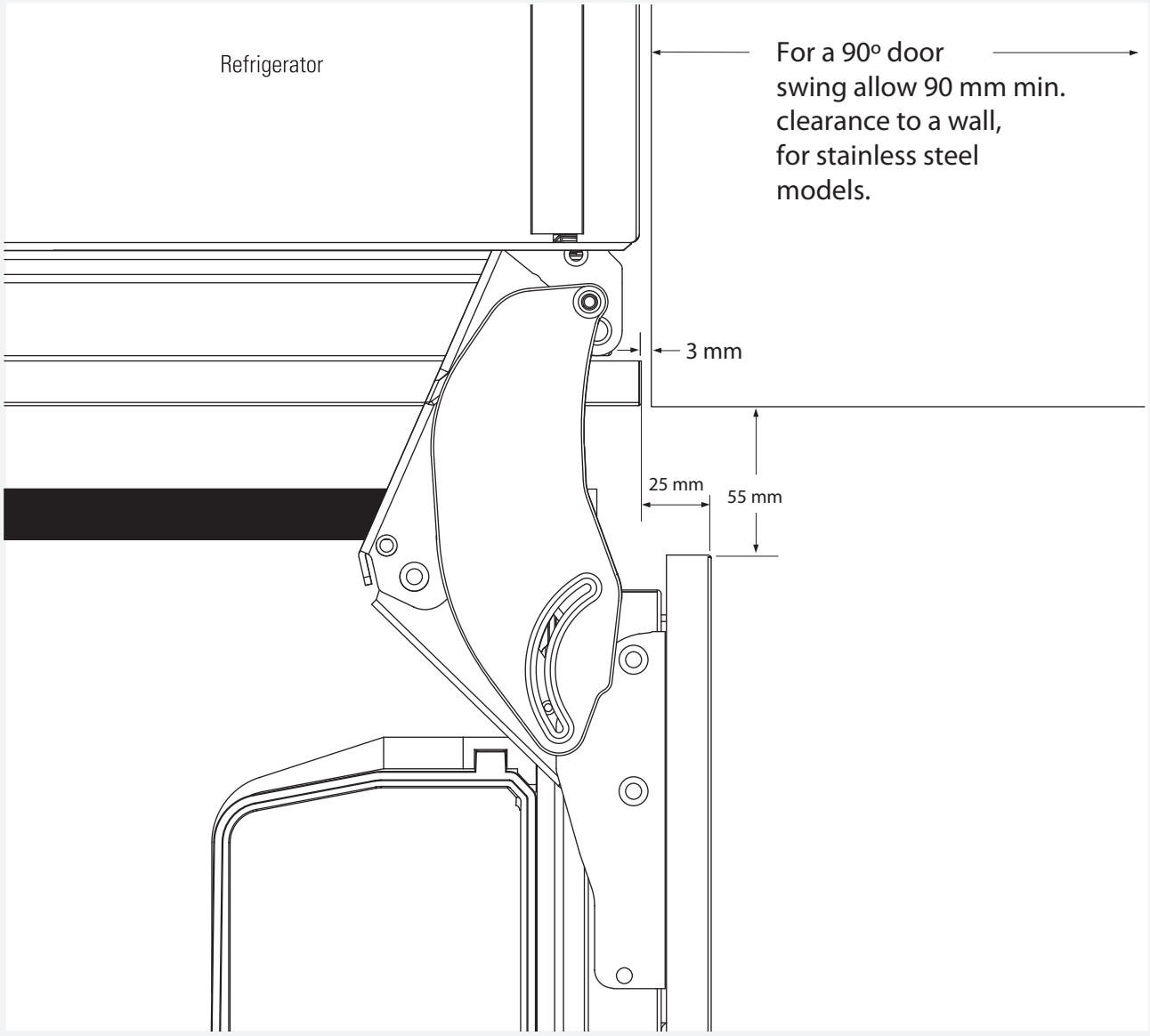

Stainless Steel or Custom Panels

Top View
90° DOOR SWING
(optional setting)

SS PANEL ACCESSORY & DIMENSIONS

19 mm-Thick Solid Door Panel Option

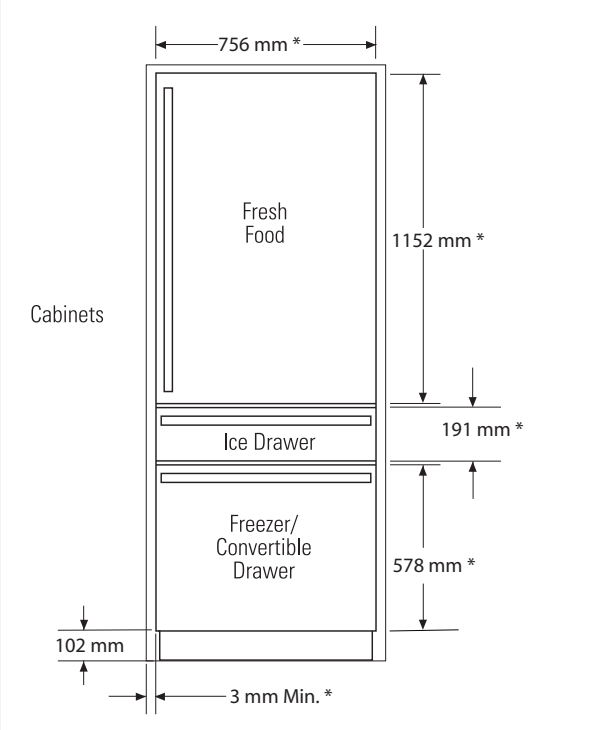

*There must be a minimum 3 mm gap between panels and surrounding cabinetry.

Optional Accessory Kits #:
- **Side-by-Side Installation Kit**

⚠ NOTE!

When using Side-by-Side Instalation Kit please refer to Side-by-Side Instalation Instructions enclosed with the kit.

19 mm-Thick Frame for Glass Door Options

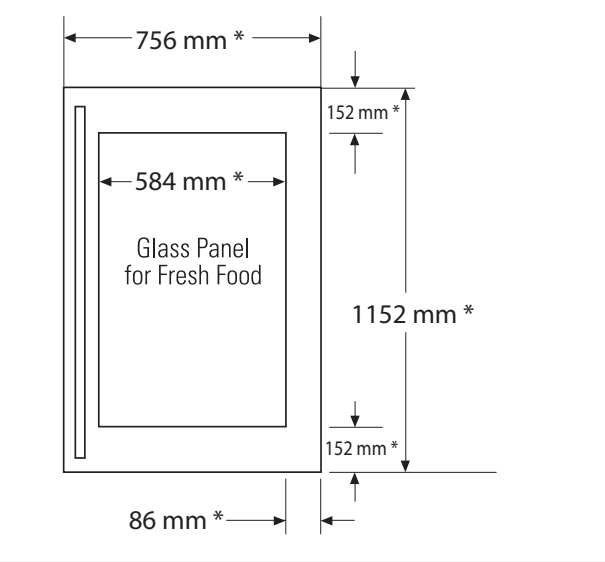

Check door panel dimensions for hook and bracket location - see pages 11-13.

19 mm CUSTOM PANEL DIMENSIONS

If you choose to install custom panels, they must be cut to the dimensions shown. The panels will attach to the door and drawers using a hook and bracket system.

⚠ EXTREMELY IMPORTANT!

Custom wood panels must be at least 14 mm thick where hooks and bracket hardware are attached. Routing of the panels is required where the hooks and brackets attach to the panels. Refer to custom panel dimensions for hook and bracket location - see pages 11, 12 and 13.

⚠ NOTE!

This product is designed to handle 19 mm panels that are made of wood.
848 x 584 mm is the maximum opening for a glass window. The opening may be smaller if desired.

PANELS FOR SOLID DOOR AND DRAWERS

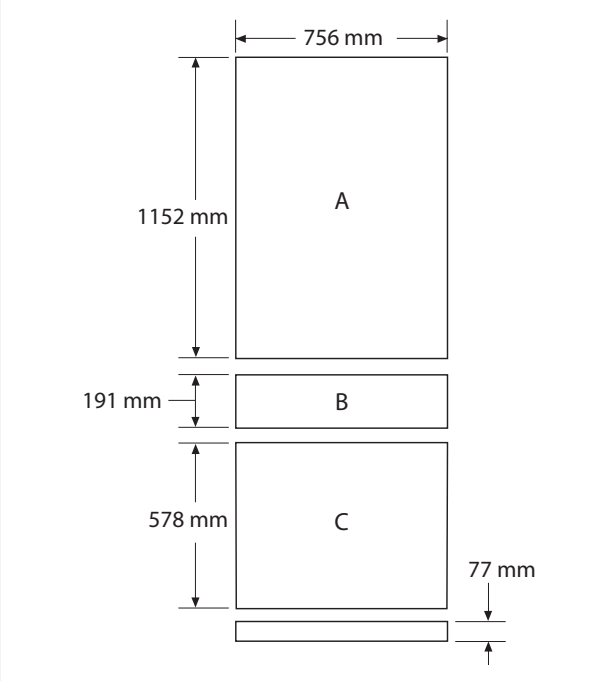

PANELS FOR GLASS DOOR

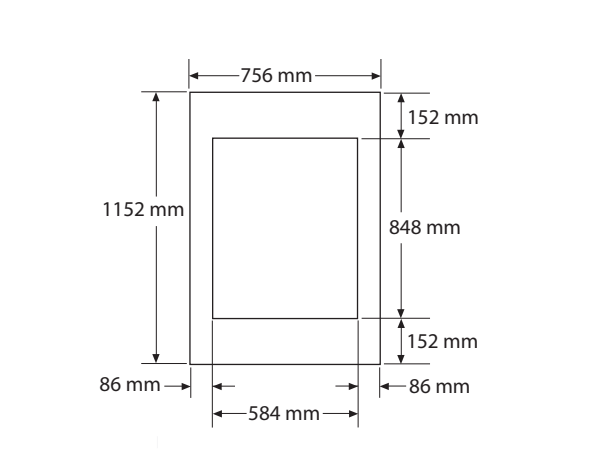

⚠ IMPORTANT NOTE!

Maximum panel weight:
A Fresh Food Door Panel: 15 kg
B Freezer Drawer Panel : 4 kg
C Convertible Drawer Panel: 8,5 kg

Design Tip: Some amount of each panel will be visible on the interior side of the unit. It is recommended that both sides of each panel be finished.

Design Tip: If using custom panels, a custom toe kick should be considered. The Bottom of case is black.

CUSTOM PANEL DIMENSIONS

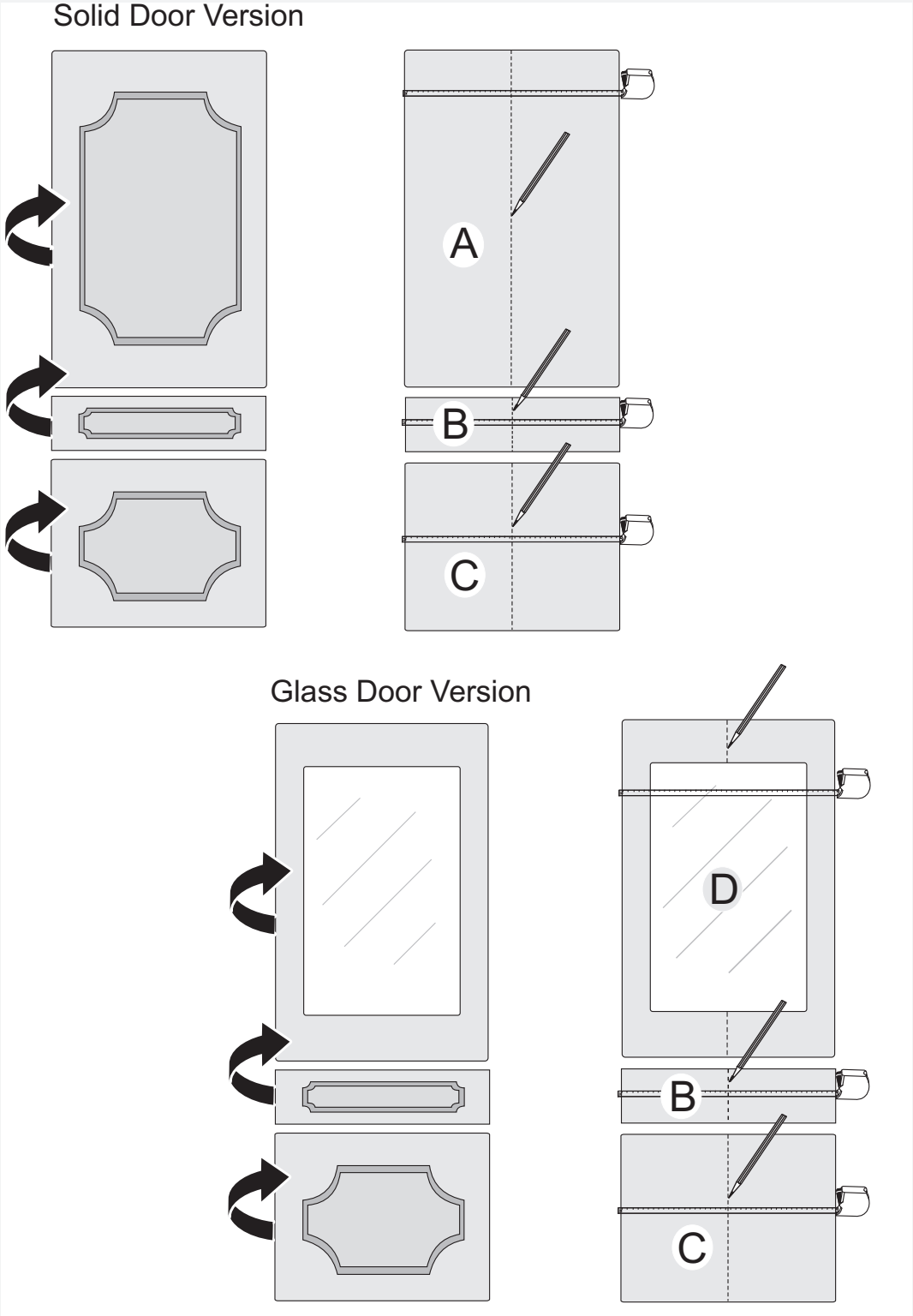

A

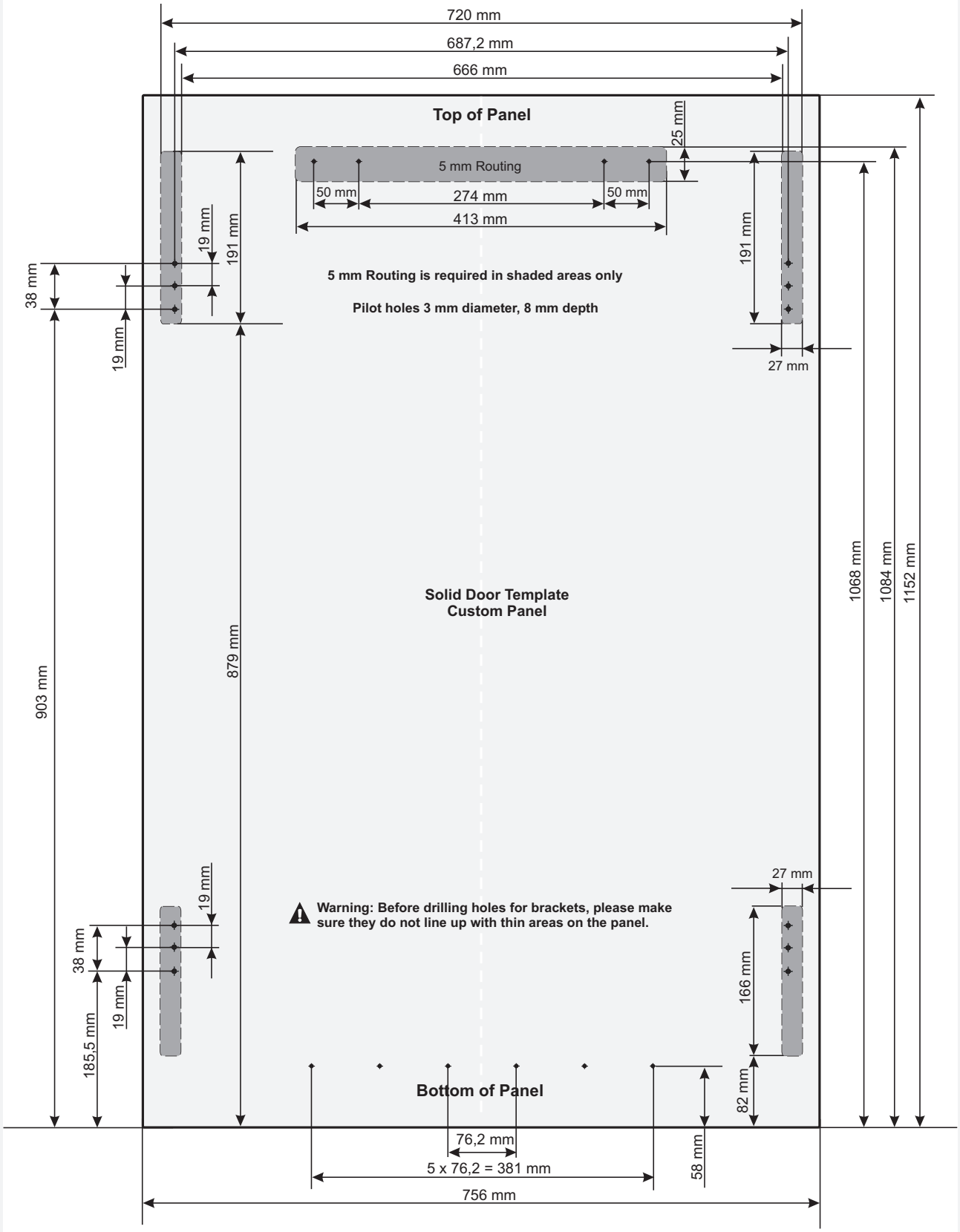
720 mm
687,2 mm
666 mm
Top of Panel
25 mm
5 mm Routing
50 mm
274 mm
50 mm
413 mm
19 mm
191 mm
191 mm
38 mm
19 mm
5 mm Routing is required in shaded areas only
Pilot holes 3 mm diameter, 8 mm depth
27 mm
1068 mm
1084 mm
1152 mm
Solid Door Template
Custom Panel
903 mm
879 mm
19 mm
27 mm
Warning: Before drilling holes for brackets, please make sure they do not line up with thin areas on the panel.
38 mm
19 mm
166 mm
185,5 mm
82 mm
Bottom of Panel
76,2 mm
5 x 76,2 = 381 mm
58 mm
756 mm

B

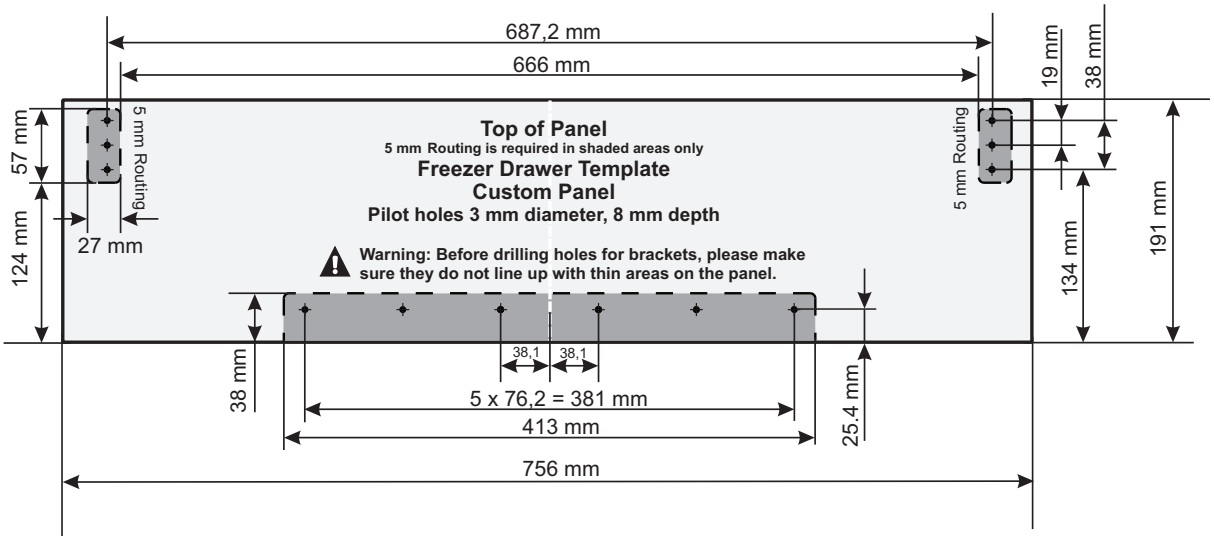
687,2 mm
666 mm
19 mm
38 mm
57 mm
5 mm Routing
Top of Panel
5 mm Routing is required in shaded areas only
Freezer Drawer Template
Custom Panel
Pilot holes 3 mm diameter, 8 mm depth
5 mm Routing
124 mm
27 mm
Warning: Before drilling holes for brackets, please make sure they do not line up with thin areas on the panel.
134 mm
191 mm
38 mm
38,1
38,1
5 x 76,2 = 381 mm
413 mm
25,4 mm
756 mm

C

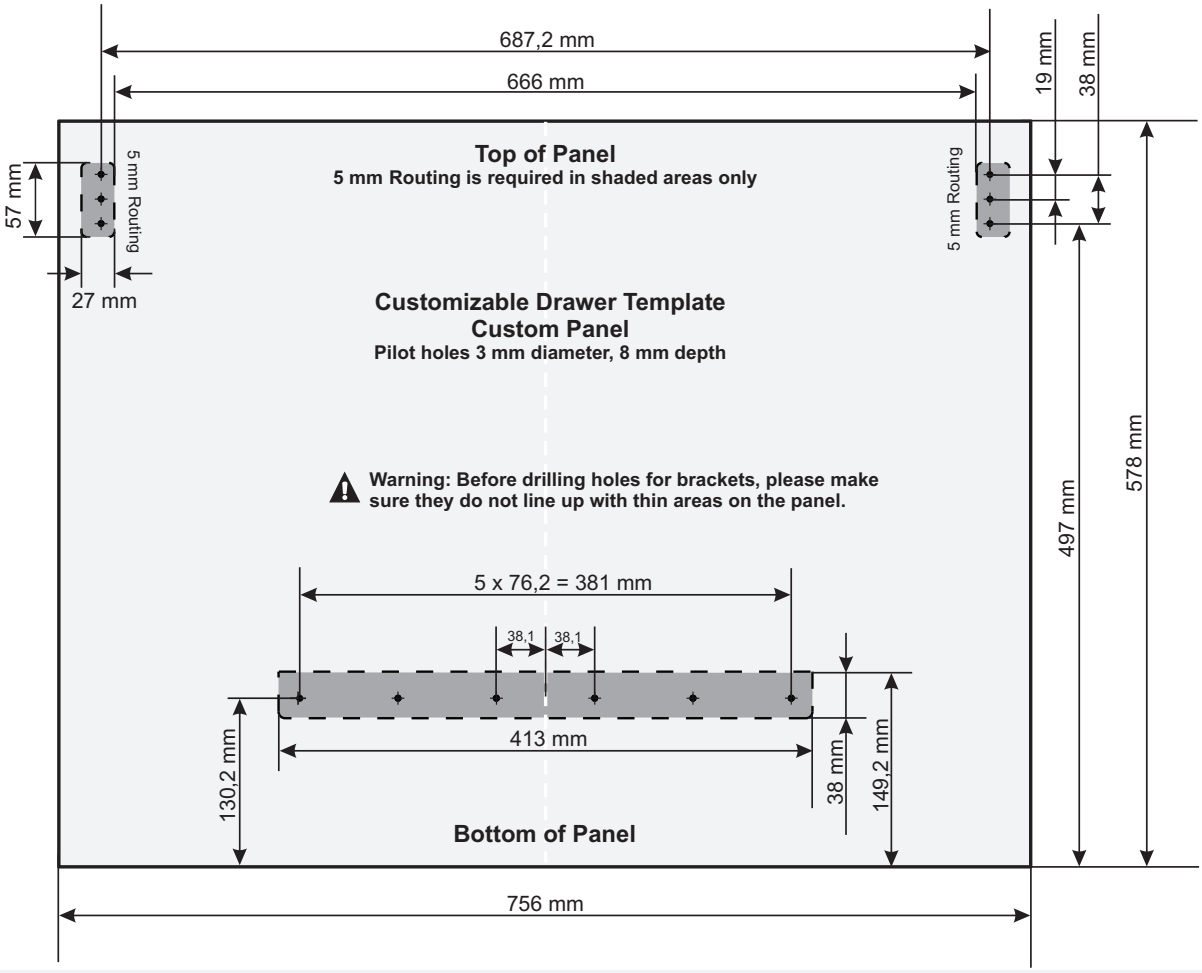
687,2 mm
666 mm
19 mm
38 mm
57 mm
5 mm Routing
Top of Panel
5 mm Routing is required in shaded areas only
5 mm Routing
27 mm
Customizable Drawer Template
Custom Panel
Pilot holes 3 mm diameter, 8 mm depth
Warning: Before drilling holes for brackets, please make sure they do not line up with thin areas on the panel.
497 mm
578 mm
5 x 76,2 = 381 mm
38,1
38,1
413 mm
130,2 mm
38 mm
149,2 mm
Bottom of Panel
756 mm

D

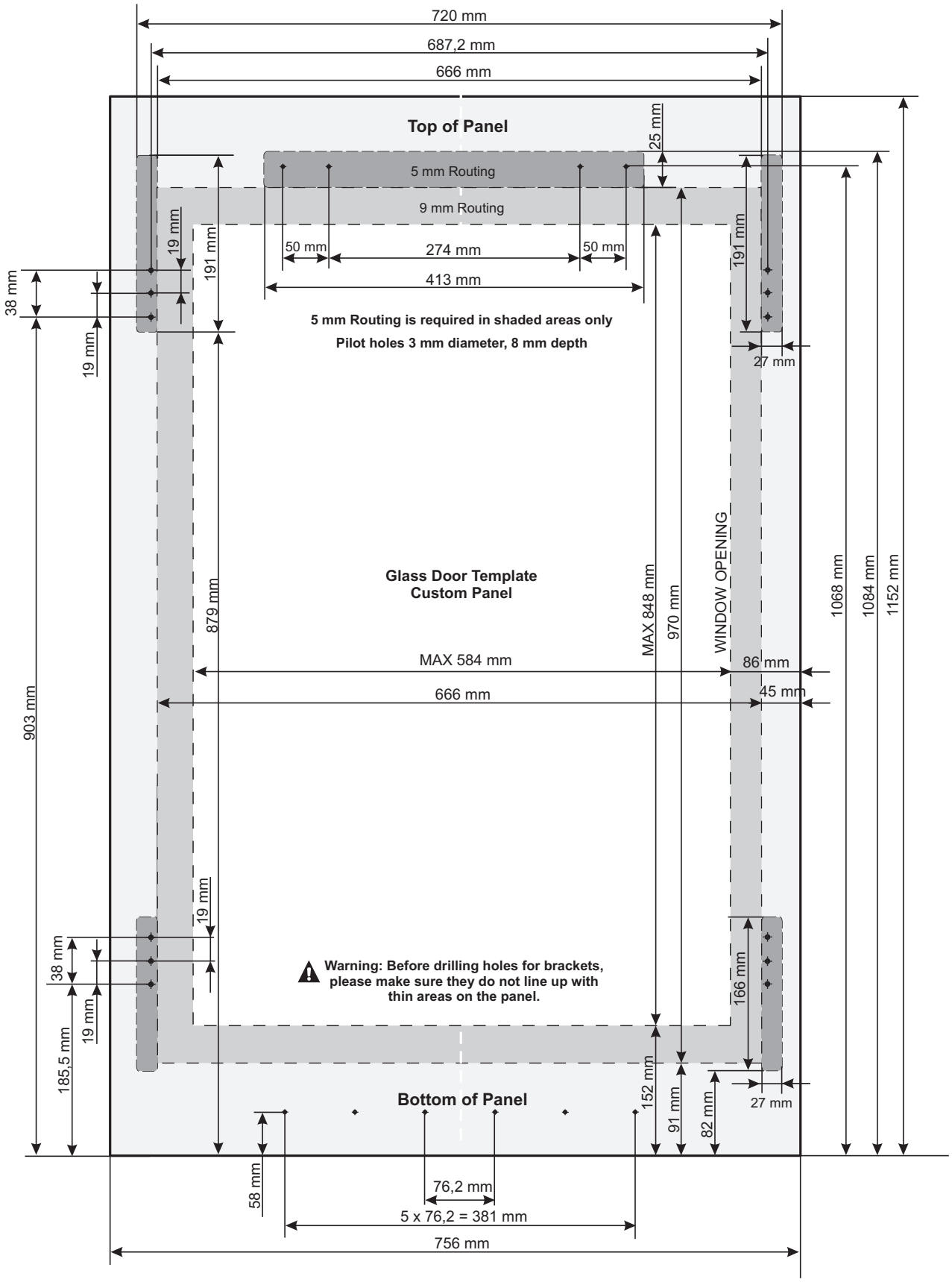
720 mm
687,2 mm
666 mm
Top of Panel
25 mm
5 mm Routing
9 mm Routing
19 mm
191 mm
50 mm
274 mm
50 mm
413 mm
191 mm
38 mm
19 mm
5 mm Routing is required in shaded areas only
Pilot holes 3 mm diameter, 8 mm depth
27 mm
Glass Door Template
Custom Panel
879 mm
MAX 848 mm
970 mm
WINDOW OPENING
1068 mm
1084 mm
1152 mm
MAX 584 mm
86 mm
666 mm
45 mm
903 mm
19 mm
38 mm
Warning: Before drilling holes for brackets, please make sure they do not line up with thin areas on the panel.
166 mm
19 mm
185,5 mm
152 mm
91 mm
82 mm
27 mm
Bottom of Panel
58 mm
76,2 mm
5 x 76,2 = 381 mm
756 mm

INSTALLATION INSTRUCTIONS

TOOLS REQUIRED

- 4 mm Allen wrench
- Utility knife
- Stepladder
- Bucket
- Level
- Appliance hand truck
- 13 mm open-end wrench
- 11 mm open-end wrench
- 32 mm open-end wrench
- #2 Phillips screwdriver
- Drill and bit set
- 8 mm socket
- Safety glasses
- Pliers
- 10 mm ratchet
- Torx T-20, T-30 wrench

HARDWARE SUPPLIED

- Anti-tip bracket & screws
- Panel mounting brackets & screws
- Drywall Anchors and screws
- Water filter
- Water tubing kit

MATERIALS REQUIRED

- Custom panels for fresh food door, freezer drawer and Convertible drawer
- Velcro w/adhesive if using custom toekick.

FLOORING

For proper installation, this refrigerator must be placed on a level surface of hard material that is at the **same height as the rest of the flooring.** This surface should be strong enough to support a fully loaded refrigerator, or approximately 500 kg.

NOTE: Protect the finish of the flooring. Cut a large section of the cardboard carton and place under the refrigerator where you are working.

STEP 1
REMOVE PACKAGING

⚠ CAUTION!

The refrigerator is top-heavy, be careful when moving.

- Cut bands and tape on the top and bottom of packaging with a utility knife.
- Unfold the cardboard seams and remove the top of the packaging.
- Slide the remainder of the box off of the appliance. You can use a box cutter to cut the remaining cardboard being VERY CAREFUL not to scratch the appliance.
- Remove the Styrofoam supports from around the unit.
- **DO NOT remove door band or lower EPS banded part until unit is ready to go into enclosure.**
- Cut EPS skid at the sides near the front from the backof the unit.
- Push unit forward & remove rear portion of the EPS skid.
- Carefully lower rear onto the floor.
- Lean unit back slightly & remove front portion of the EPS skid.
- Discard all unused packaging materials appropriately.
- The unit can now be moved using an appliance hand truck or rolled on a properly protected floor by 2 people.
- Leave any protective film on the refrigerator until installation is complete.

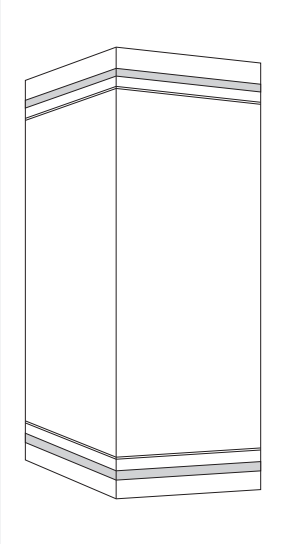

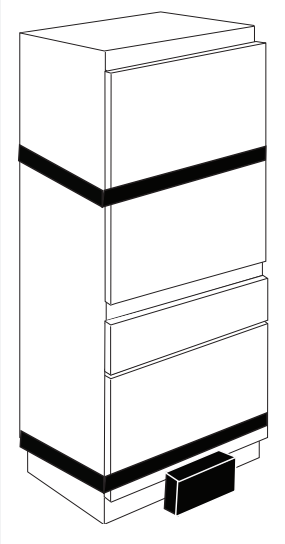

STEP 2
INSTALL ANTI-TIP BRACKET

- Inside Top Face of bracket should be installed at 203 cm. “Slot” in bracket should to be placed in center of install Space (Typically 38 cm).
- Mark (within slots, placement) stud and anchor positions on brackets.

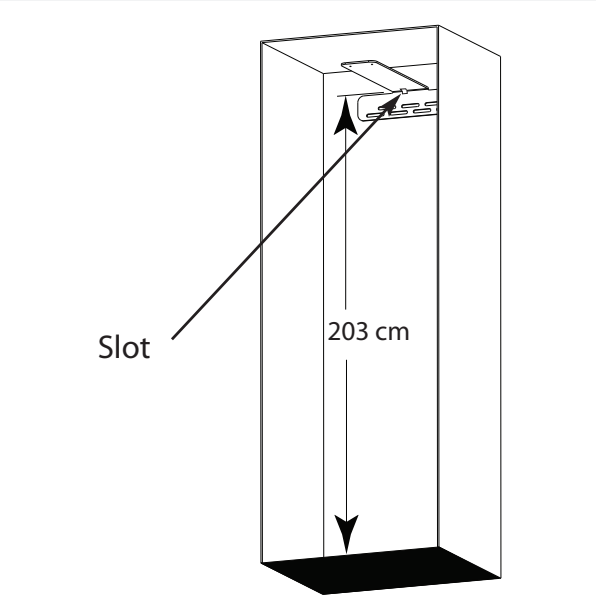

- Secure bracket using combination of studs & anchors.
- At least 1 stud must be engaged. However, please engage as many studs as possible within the enclosure. A mininum of three fasteners should be used for proper installation.

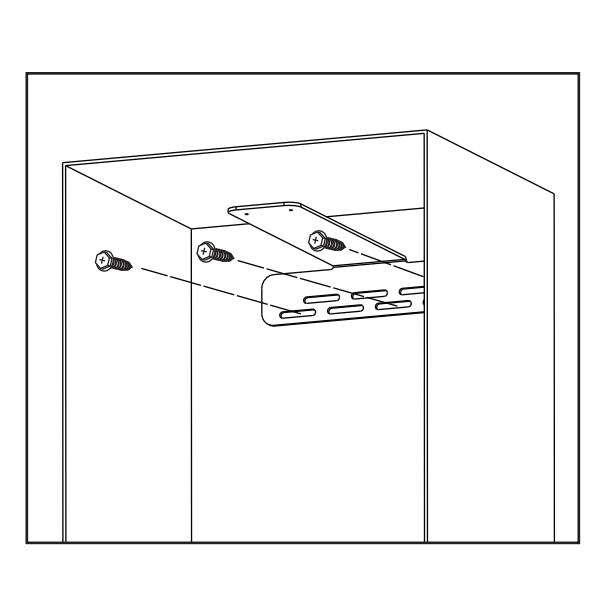

STEP 3
CONNECT WATER LINE

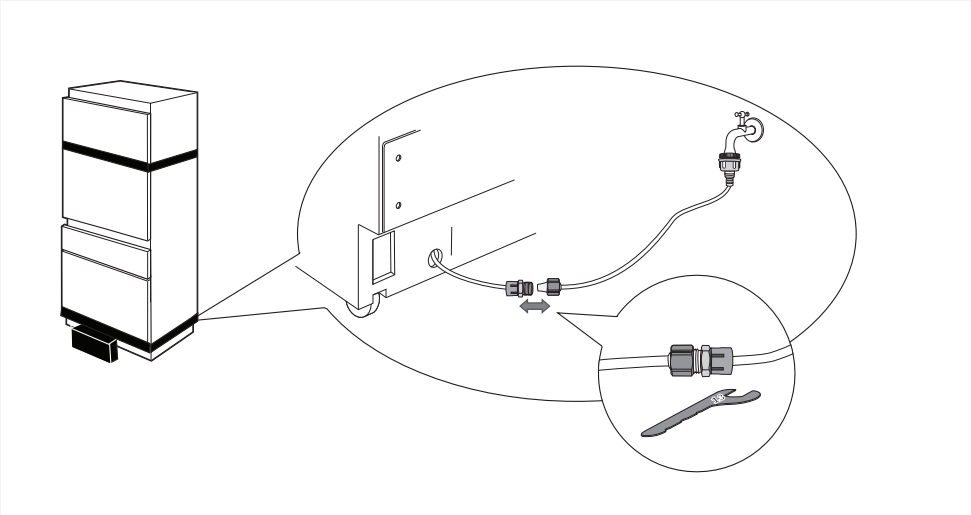

- Insert the end of the enclosed water tubing into the refrigerator connection. Tighten the compression nut until it is just hand-tight.
- Tighten one additional turn with a wrench. Over tightening can cause leaks!
- Turn on the water to check for leaks.

STEP 4
CONNECT POWER

- Plug the power cord into the socket.
- Check to make sure power to refrigerator is on by opening the ice drawer (FF door will be banded shut) to see if interior lights are on.
- The temperature controls are preset at 3°C for the fresh food section and -18°C in both the freezer drawer and customizable drawer.
- Allow 24 hours to stabilize before making adjustments.

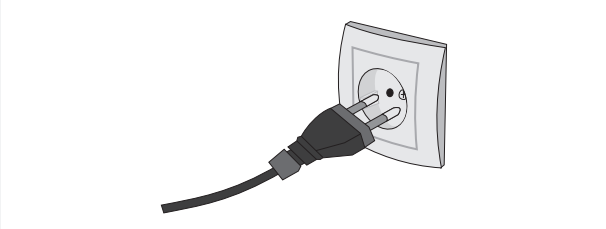

STEP 5
SLIDE UNIT INTO ENCLOSURE

Roll the unit into the enclosure, being careful not to pinch the water line or power cord.

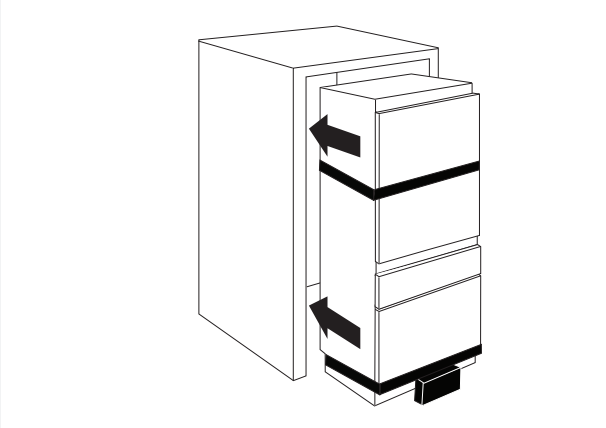

- A long flat bar or yard stick may be needed to guide the front edge of the anti-tip bracket over the unit.
- If space allows, you may also bend the front edge of the bracket upward slightly, allowing it to clear the back of the unit.

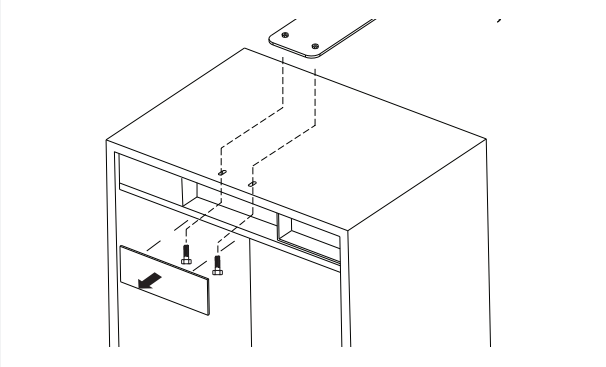

- Remove Top-Center trim cover from unit.
- Secure the unit to the Anti-tip bracket using both machine screws & washers to engage the threaded inserts in the anti-tip bracket.
- Hand start the screws until unit is in desired location within the install space.
- Finalize unit install by tighening the screws fully.
- Reinstall Trim cover.

STEP 6
REMOVE TOEKICK AND VENT

The toekick must be removed to access the leveling leg system.

- Remove band around EPS block in front of toekick.
- Remove and dispose of EPS block.
- Remove the solid portion of the toekick by pulling forward.
- Place the toekick, vent and screws out of the way so you will have them for reinstallation.

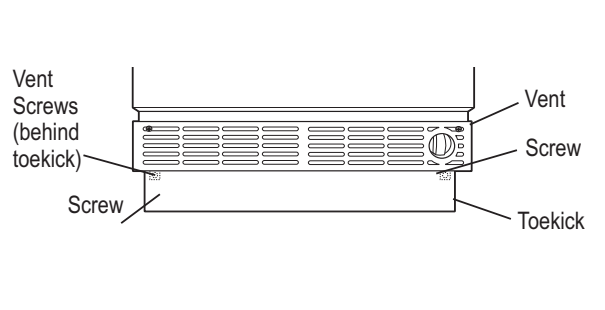

STEP 7
LEVEL REFRIGERATOR

All models have 4-point leveling. The front is supported by leveling legs; the rear is supported by adjustable wheels. Both are accessible from the front of the refrigerator.

- To level the back of the refrigerator, turn the 8 mm hexnut located above the front wheels. Turn counter clockwise to raise or clockwise to lower the refrigerator.
- For front leveling, use a 32 mm open-end wrench.
- Adjust height of refrigerator to match installation cutout opening. The refrigerator should be level and plumb with cabinetry.

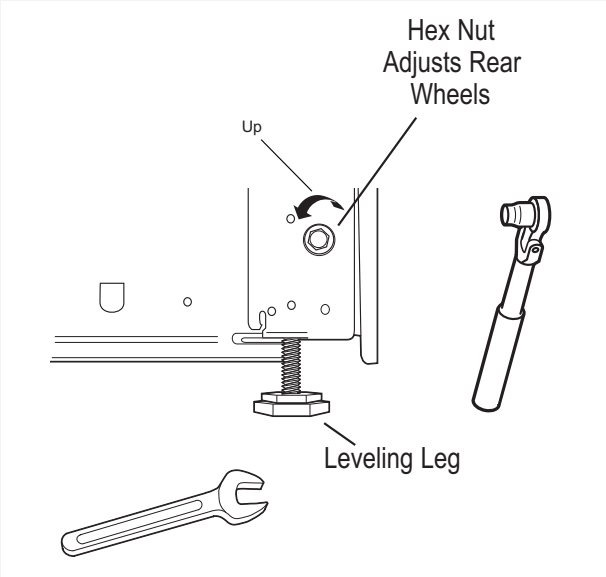

⚠ CAUTION!

The rear leveling wheels and front leveling legs are limited to a maximum height adjustment of 24 mm. **If you attempt to raise the refrigerator more than 24 mm, you will damage the front leveling legs and the rear leveling wheels.**

STEP 8
INSTALL TOEKICK AND VENT

- Locate the toekick, vent and screws (removed earlier).
- A custom toekick can be installed to match or complement the surrounding cabinetry. Use the supplied toekick as a template.
- Reinstall the vent using the screws removed earlier.
- Reinstall the toekick.

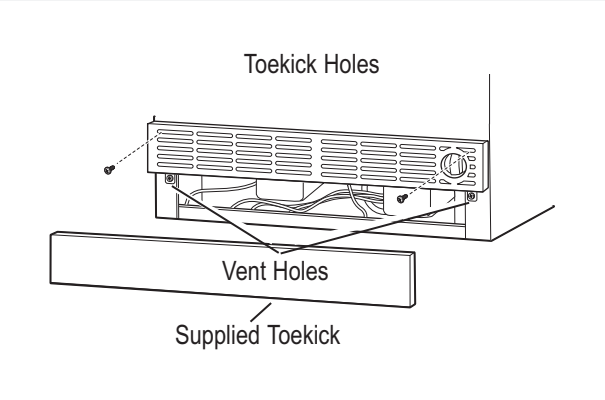

STEP 9
REVERSE DOOR SWING (If needed)

Skip this step if door swing is satisfactory.

1. Open the fresh food door.

> ⚠ WARNING!
>
> **This next step is important for safe handling of an unloaded hinge. Do not skip step 2.**

2. Release the hinge springs by using a Torx T-20 wrench to loosen the Torx screw from I to 0 on both hinges. Close the door.

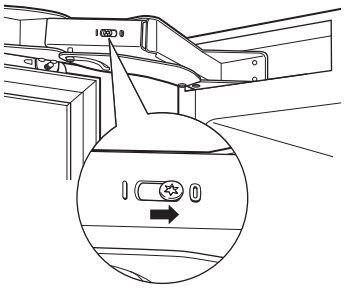

3. Using a 4 mm Allen wrench, remove the 2 screws perhinge that secure the door to the refrigerator. Have someone hold the door while removing these screws to keep the door from falling.

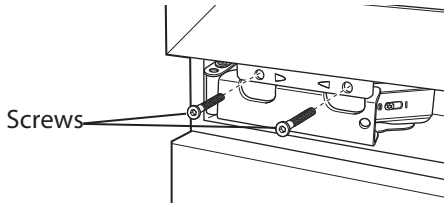

4. Open the hinges. Using a 4 mm Allen wrench, remove the 2 screws per hinge that secure the hinge to the refrigerator cabinet.

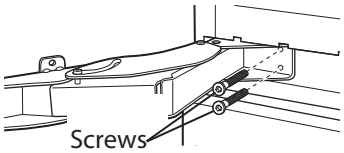

5. Remove the trim and hinge pocket from the top of the refrigerator and install on the opposite sides.
6. Remove the trim and hinge pocket from the bottom of the fresh food compartment. Remove the control paneland gently place in the FZ drawer.

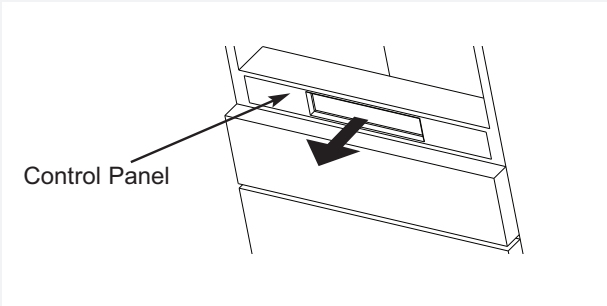

7. Reinstall the control panel.
8. The hinges will be reinstalled in opposite corners. The hinge from the top will be turned over and installed at the bottom of the fresh food compartment. The hinge from the bottom will be turned over and installed at the top of the fresh food compartment.

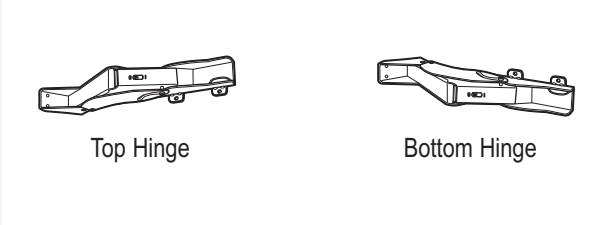

9. Install the screws on the fresh food compartment cabinet in all 4 places. Screw them in about halfway.

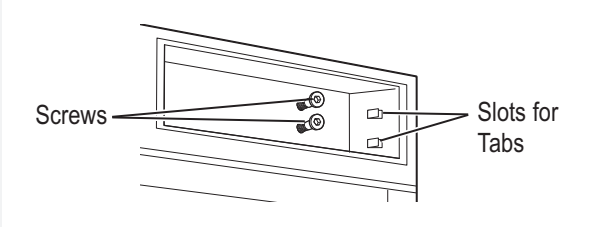

10. To install the top hinge, turn the hinge in the proper direction—the section of the bracket that will be attached to the door should be at the bottom of the hinge. Slide the hinge over the screws and seat the tabs into the hinge pocket. Tighten the screws.

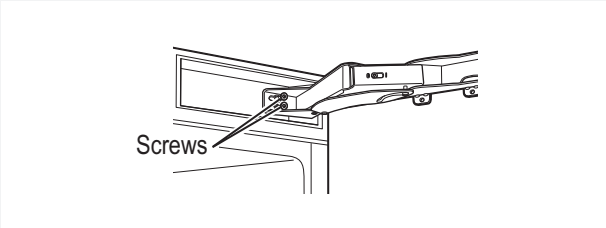

11. To install the bottom hinge, turn the hinge in the proper direction—the section of the bracket that will attach to the door should be at the top of the hinge. Slide the hinge over the screws and seat the tabs into the hinge pocket. Tighten the screws. Close the hinge.

12. Remove the hinge brackets from the door and reinstall them on the opposite end, top and bottom.

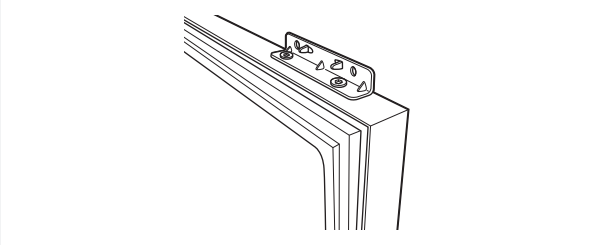

13. With another person holding the door in place, align the holes in the door hinge bracket with the holes in the hinge. Install the screws to the top hinge first.

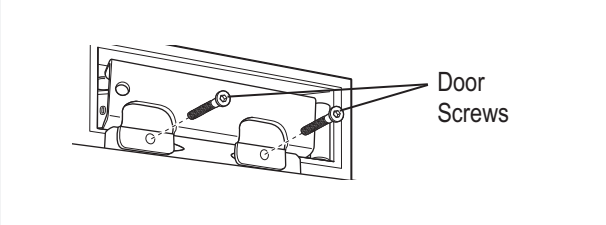

14. Install screws on the bottom hinge next.
15. Using a Torx T-20 wrench, tighten the tension on the hinge springs by turning the screws from 0 to I.

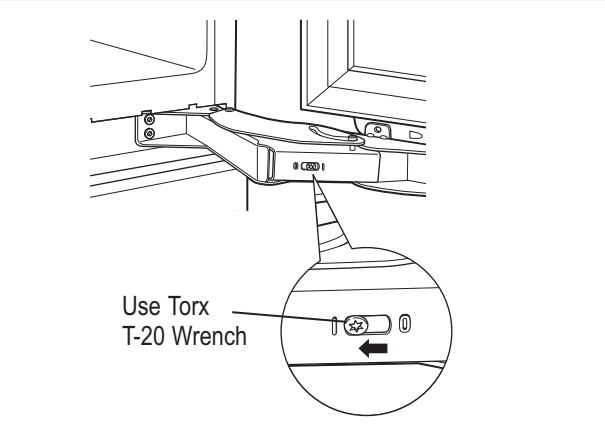

STEP 10
ADJUST DOOR SWING (if needed)

NOTE: This refrigerator has a 2-position door stop. When space does not allow the door to swing to 115°, you may limit the door swing to a 90°.

Skip this step if door opening is satisfactory for your installation situation.

- Open the fresh food door to access the top and bottom hinges.
- Loosen the bottom hinge screws that attached to the unit.
- Pull hinge forward slightly & insert hinge pin into the hole nearest the unit.
- You may need to use a small hammer to fully seat them in place.
- Retighten hinge screws.
- Repeat for top hinge.

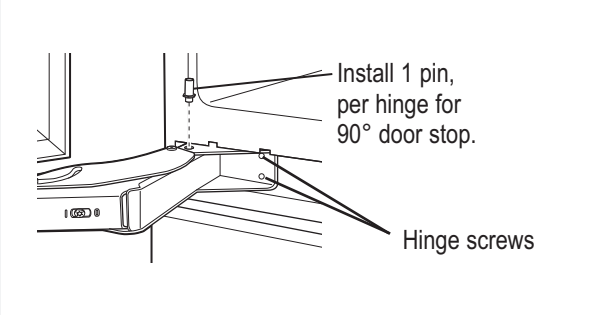

STEP 11
ATTACH HINGE GUARD

⚠ WARNING!

This appliance must be installed & operated with the hinge guard in place !

1. Tape hinge guard cover to side of case. Align cover with top and front edges of case.
2. Attach hinge guard by sliding flat part between case and hinge guard cover.
3. Fasten guard to door front using screws.

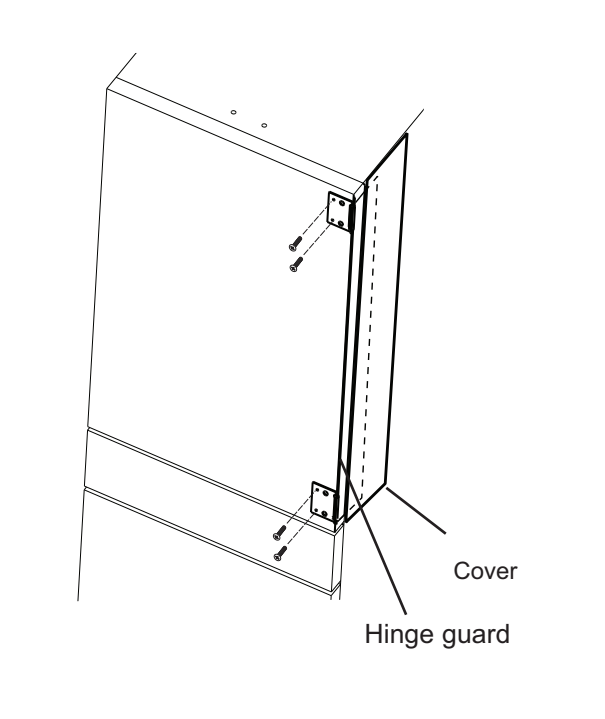

STEP 12
INSTALL DOOR AND DRAWER PANELS

1. Remove all door and drawer hooks from the unit and screw them to the custom panels, aligning them with the lowest set of predrilled holes for Panel Kits on the FF door panel.
2. Attach top L-Bracket to FF panel.
3. Open the fresh food door to attach the fresh food panel.
4. Slide the hooks on the fresh food panel into the slots of the door, and lower the hooks into place. Make sure the bracket on the top of the panel slides over the screw postson top of the door. The brackets will rest on top of the nuts.

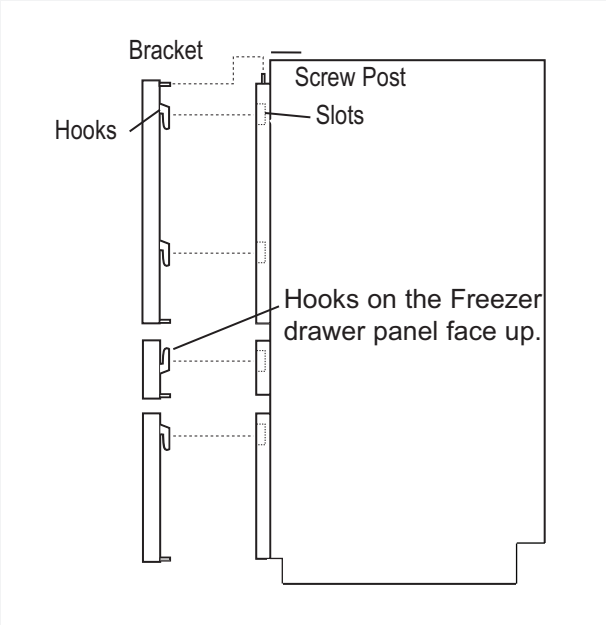

5. Adjust the screw posts up or down under the bracket on top of the door to level the panel.
6. Lock the panel to the door by installing the nuts provided onto the screw posts on top of the door. Next, screw the L-bracket provided into the bottom of the door and the panel.

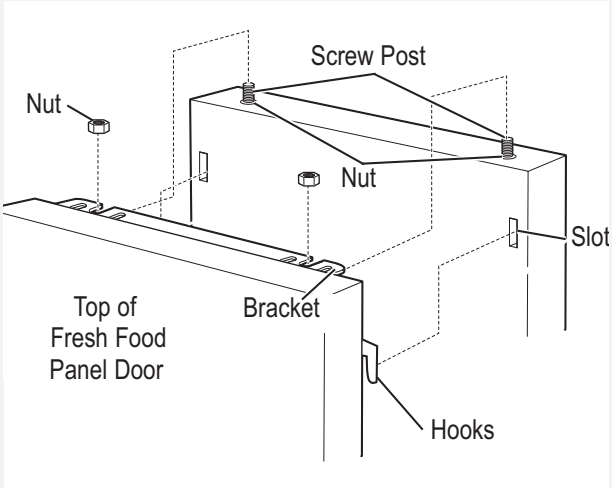

7. Install the Freezer drawer panel by sliding the brackets **up** into place (the opposite direction of the hooks on the fresh food panel and Convertible drawer).
8. Once the drawer panel is placed fasten the panel to the drawer by screwing the bottom bracket into the panel with the screws provided.
9. Repeat for the second drawer by sliding the hooks **down** instead of up.
10. If using custom toekick attach the toekick panel by placing Velcro on the back of the panel, and on the front of the toekick. If using SS toekick it is magnetic.
11. Adjust drawer alignment using lower brackets as needed to create uniform gaps.

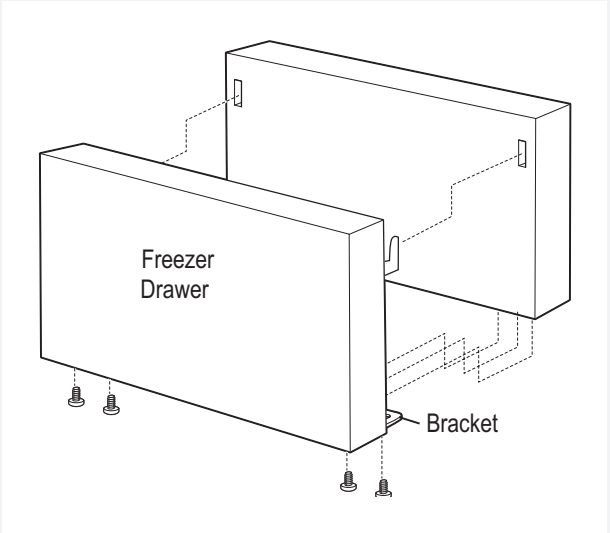

BACK VIEW OF PANEL HOOKS AND BRACKET

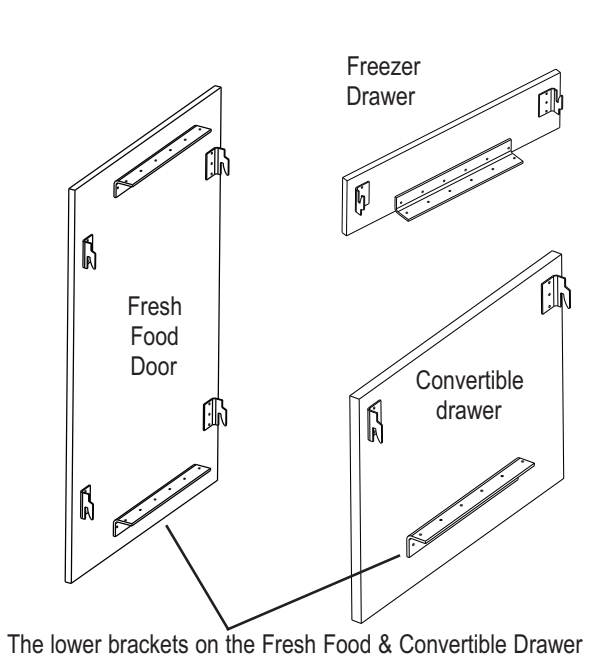

The lower brackets on the Fresh Food & Convertible Drawer should not be installed until after the panel is in place.

STEP 13
START ICEMAKER

- Press the **ZONE** indicator on the control pad twice to select the freezer drawer. Press the **ICE** icon on the right side of the control. A line will appear under **ICE** to show that the icemaker is ON.
- Be sure nothing interferes with the sweep of the feelerarm.
- Discard the first full bucket of ice cubes.

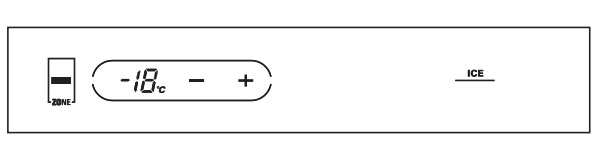

- To turn the icemaker off, press the **ICE** icon. The word **OFF** appears below **ICE** to show that the icemaker is OFF.

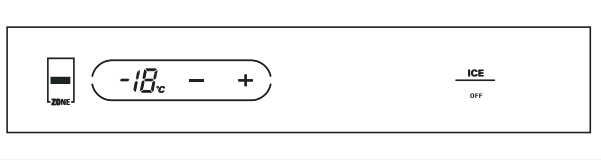

ASKO

466870 en (03-15)